TECHNICAL UNIVERSITY OF CRETE

SCHOOL OF MINERAL RESOURCES ENGINEERING

MSc in PETROLEUM ENGINEERING

A TECHNO ECONOMICAL AND COMPARATIVE EVALUATION ON CO_2 CAPTURE TECHNOLOGIES

MASTER THESIS

PAFRA EIRINI

Examination committee:

Prof. N. Pasadakis (Technical University of Crete)

Asst. Prof. V. Gaganis (National Technical University of Athens)

Asst. Prof. D. Marinakis (University of Western Macedonia)

Chania

June, 2023

A Master Thesis submitted in partial fulfillment of the requirements for the degree of Master of Science in Petroleum Engineering.

ABSTRACT

Carbon capture and storage (CCUS) is a core technology for preventing the release of CO2 produced through conventional industrial production and power generation processes. Climate change and global warming are in the spotlight and is addressed globally nowadays. This paper aims to identify the most economically viable carbon capture technologies for reducing carbon emissions and we conduct a comparative economic assessment of three technologies, namely, absorption, adsorption, membranes, and hydrate-based carbon capture technologies by trying to implement the taxation data applicable as well.. The comparison reveals that the simple absorption process deploying an aqueous solution of piperazine (PPZ) is economically more viable than membrane and sorption-based separation processes, but the capture cost is high while the results also showed that hydrate capture has been identified as a more sustainable and cost-effective option.

ACKNOWLEDGEMENTS

First of all, I would like to express my sincere gratitude to my supervisor Professor Nikos Pasadakis for his scientific advice on the project. I would also like to thank Professor Vasilis Gaganis for his continuous support throughout the whole MSc period, Ms Eleni Chamilaki and my colleagues from the academic years of both 2019-2020 and 2020-2021 for being so awesome.

Finally, I would like to thank my family and my AV2 guys, my shabab, for their mental support and encouragement. Well, the truth is that without them I would have graduated at least a year earlier, but what is life without some minor adjustments to its fixed schedule?

Table of Contents

Table of Contents 5

Table of Figures 7

List of Tables 8

1.0 INTRODUCTION 9

1.1 The Greenhouse Effect 9

1.2 Greenhouse Gases 11

1.3 Greenhouse Gases Emissions and Global Warming 12

1.4 The Greenhouse Effect Solution 16

1.5 Carbon dioxide 17

Importance of carbon dioxide 20

Past and future carbon dioxide 21

1.6 Policies and Investment 24

2.0 ECONOMICAL DATA ON GLOBAL CO^2 TAXATION 26

2.1 Background 26

2.2 Rationale for a Carbon Tax 27

2.3 Environmental Effectiveness 28

2.3 Carbon Tax Design Implications 31

2.4 Carbon Tax Revenue Implications 34

2.5 Macroeconomic Impacts of Carbon Taxes 35

2.6 Carbon Tax's Distributional Implications 37

2.7 Conclusions 40

3.0 BASIC TECHNOLOGIES OF CARBON CAPTURE 42

3.1 Background and Definitions 42

3.2 **CO_2** Collection Processes in Today's Fuel-fired Power Plants 43

3.2.1 Pre-combustion: 44

3.2.2 Oxy-combustion 45

3.2.3 Post-combustion 47

3.3 Absorption 48

3.3 Adsorption 51

3.4 Membranes 53

3.5 Hydrates 57

4.0 ECONOMICS ON CARBON CAPTURE TECHNOLOGIES 63

4.1 Absorption 63

4.2 Adsorption 71

4.3 Membranes 75

4.4 Comparative Economic/Cost Assessment of Post-combustion technologies 77

4.5 Hydrate-Based Technology 80

4.6 Further Comparisons 81

5.0 CONCLUSIONS 82

6.0 REFERENCES 84

6.0 APPENDICES 97

Appendix 1: Global Carbon Taxes (2022) 97

Table of Figures

Figure 1: CO2 Emissions from Energy combustion and industrial processes 18
Figure 2: Global anthropogenic emissions have continued to rise across all major groups of greenhouse gases 19
Figure 3: Latest CO2 Measurement 20
Figure 4: Carbon dioxide over 800,000 years 22
Figure 5: Global Carbon Cycle 23
Figure 6: US GHG Emissions by Gas, 2017 32
Figure 7: CCS process 42
Figure 8: Carbon Capture Processes 43
Figure 9: Example of pre-combustion CO2 capture method 44
Figure 10: Oxy-combustion process 46
Figure 11: Post-combustion 47
Figure 12: CO2 Capture Methods and Techniques 48
Figure 13: Chemical Absorption schematic diagram 50
Figure 14: Gas separation and Absorption membranes 54
Figure 15: Membrane separation process 54
Figure 16: Lab-scale stirrer-tank reactors. (a) Impeller & external motor. (b) Magnet bar & magnet stirrer. 59
Figure 17: Linga et al.'s gas-inducing reactor 60
Figure 18: A solvent-based CO2 capture process' Flow diagram 64
Figure 19: Absorption: TAC/unit CO2 captured 65
Figure 20: Technical optimization results for absorption using aqueous PZ 67
Figure 21: Absorption: Cost breakdown/unit carbon dioxide capture for 90% recovery Pareto front 67
Figure 22: (a) Exergy consumption breakdown considering HEATEX; (MOVERS) & LIQUEF. (b) Inverse of productivity breakdown considering the absorber packing's volume, the desorber packing, & the R/L HX. 69
Figure 23: Absorption: Curve of AOC vs AIC per ton of CO2 captured. 70
Figure 24: Adsorption: Curve of TAC/unit carbon dioxide capture related to Figure 25's Pareto fronts. 71

Figure 25: Adsorption: Data points & exergy-productivity Pareto fronts at various carbon-dioxide rates of recovery for diverse cycle configurations. 72
Figure 26: Adsorption Curve of AOC vs AIC/ton of CO2 captured. 73
Figure 27: Adsorption: Cost breakdown/unit carbon dioxide capture for the minimum cost designs at 90% recovery. 74
Figure 28: The multistage membrane process' schematic with feed splitting and recirculation . 76
Figure 29: Membranes: Cost breakdown/unit carbon-dioxide capture for the Pareto front at 90% recovery. 76
Figure 30: Cost maps as a function of plant size and recovery rate for the three technologies... 78

List of Tables

Table 1: Revenue Impact of a $50/Metric Ton Carbon Tax, Escalating at 5% p.a., 2020-2029 (Billions of Dollars) 35
Table 2: Summary Table of Advantages and Disadvantages of Common Carbon Capture Technologies 55
Table 3: Pros and cons of Common hydrate reactors 62

1.0 INTRODUCTION

1.1 The Greenhouse Effect

Identified by scientists as far back as 1896, the greenhouse effect is the natural warming of the earth that results when gases in the atmosphere trap heat from the sun that would otherwise escape into space (Arrhenius, 1896). The greenhouse effect occurs when carbon dioxide, water vapor, and methane gases in the Earth's atmosphere trap energy from the Sun, making the Earth's surface warmer. According to NASA (2023), the greenhouse effect helps to keep the Earth's surface warm enough for living things to survive (NASA, 2023). Without the greenhouse effect, the Earth's average surface temperature would be about -18°C (0°F), which is way too cold for most living things to survive. Despite the importance of the greenhouse effect, human activities, such as burning fossil fuels and deforestation, have increased the amount of greenhouse gases in the atmosphere, which is causing the greenhouse effect to become stronger; a process known as global warming (NOAA, n.d.; Tuckett, 2019).

Regarding the causes of the greenhouse effect, sunlight makes the earth habitable. While 30 percent of the solar energy that reaches the world, it is reflected back to space, approximately 70 percent passes through the atmosphere to the earth's surface, where it is absorbed by the land, oceans, and atmosphere, and heats the planet (Kweku et al., 2018). This heat is then radiated back up in the form of invisible infrared light. While some of this infrared light continues on into space, the vast majority—some 90 percent—gets absorbed by atmospheric gases, known as greenhouse gases, and redirected back toward the earth, causing further warming (Anderson et al., 2016). For the past 8, 000 centuries, the concentration of greenhouse gases in our atmosphere was between about 200 and 280 parts per million, meaning that there were 200 to 280 molecules of the gases per million molecules of air (Letcher, 2020). However, during the last century, this

concentration has increased to more than 400 parts per million, driven up by human activities such as burning fossil fuels and deforestation (Letcher, 2020). The higher concentrations of greenhouse gases—and carbon dioxide in particular—is causing extra heat to be trapped and global temperatures to rise.

The Earth's greenhouse gases trap heat in the atmosphere and warm the planet. According to Kweku et al. (2018), the main gases responsible for the greenhouse effect include carbon dioxide, methane, nitrous oxide, and water vapor (which all occur naturally), and fluorinated gases (which are synthetic). Greenhouse gases have different chemical properties and are removed from the atmosphere, over time, by different processes. Carbon dioxide, for example, is absorbed by carbon sinks, which include forests, soil, and the ocean (Whitehead, 2011). Fluorinated gases are destroyed only by sunlight in the far upper atmosphere. Generally, fluorinated gases are the longest lasting and most potent greenhouse gases emitted by anthropogenic activities (Remuzgo et al., 2016). There are three factors that determine the impact level of greenhouse gases on global warming. The first factor is how much of it exists in the atmosphere. Concentrations are measured in parts per million (ppm), parts per billion (ppb), or parts per trillion (ppt); 1 ppm for a given gas means (Blasing & Smith, 2016). The second factor is its lifetime—or how long it remains in the atmosphere. The third is how effective it is at trapping heat or its global warming potential, or GWP. The global warming potential is a measure of the total energy that a gas absorbs over a given period of time (usually 100 years) relative to the emissions of 1 ton of carbon dioxide (Nolt, 2011). Radiative forcing (RF) is another way to measure greenhouse gases and other climate drivers, such as the sun's brightness and large volcanic eruptions (Butler & Montzka, 2016). Also known as climate forcing, RF quantifies the difference between how much of the sun's energy gets absorbed by the earth and

how much is released into space as a result of any one climate driver (Rigby et al., 2014). A climate driver with a positive RF value indicates that it has a warming effect on the planet; a negative value represents cooling.

1.2 Greenhouse Gases

The most significant gases that cause global warming via the greenhouse effect are Carbon dioxide, methane, nitrous oxide, fluorinated gases, and water vapor. *Carbon dioxide makes up about* 76 percent of global human-caused emissions, and has been around for quite a while. Once it's emitted into the atmosphere, 40 percent still remains after 100 years, 20 percent after 1,000 years, and 10 percent as long as 10,000 years later (Sabine, 2014). Contrarily, although methane (CH_4) persists in the atmosphere for far less time than carbon dioxide (about a decade), it is much more potent in terms of the greenhouse effect. In fact, pound for pound, its global warming impact is 25 times greater than that of carbon dioxide over a 100-year period (Sabine, 2014). Globally, it accounts for approximately 16 percent of human-generated greenhouse gas emissions. On its part, Nitrous oxide (N_2O) is a powerful greenhouse gas: It has a GWP 300 times that of carbon dioxide on a 100-year time scale, and it remains in the atmosphere, on average, a little more than a century (Schulze et al, 2009). It accounts for about 6 percent of human-caused greenhouse gas emissions worldwide. For fluorinated gases, largely man-made, various industrial and manufacturing processes emit them. There are four main categories: hydrofluorocarbons (HFCs), perfluorocarbons (PFCs), sulfur hexafluoride (SF_6), and nitrogen trifluoride (NF_3) (Wolf, 2011). Finally, water vapor is the most abundant greenhouse gas overall and differs from other greenhouse gases in that changes in its atmospheric concentrations are linked not to human activities directly, but rather to the warming that *results* from the other greenhouse gases we emit (Meinshausen et al., 2017). Warmer air holds more water. And since

water vapor is a greenhouse gas, more water absorbs more heat, inducing even greater warming and perpetuating a positive feedback loop. It's worth noting, however, that the net impact of this feedback loop is still uncertain, as increased water vapor also increases cloud cover that reflects the sun's energy away from the earth.

1.3 Greenhouse Gases Emissions and Global Warming

Since the start of the Industrial Revolution and the advent of coal-powered steam engines, human activities have vastly increased the volume of greenhouse gases emitted into the atmosphere (Ruddiman, 2017). It is estimated that between 1750 and 2011, atmospheric concentrations of carbon dioxide increased by 40 percent, methane by 150 percent, and nitrous oxide by 20 percent (Sanderson, 2011). In the late 1920s, man-made fluorinated gases like chlorofluorocarbons, or CFCs, started being emitted to the atmosphere (Mulder, 2017). In recent decades, these emissions have begun increasing. Of all the man-made emissions of carbon dioxide—the most abundant greenhouse gas released by human activities, and one of the longest-lasting—from 1750 to 2010, approximately half were generated in the last 40 years alone, in large part due to fossil fuel combustion and industrial processes (Pierre-Louis, 2018). And while global greenhouse gas emissions have occasionally plateaued or dropped from year to year (most recently between 2014 and 2016), they're accelerating once again. In 2017, carbon emissions rose by 1.6 percent; in 2018 they increased by an estimated 2.7 percent (Pierre-Louis, 2018).

Population size, economic activity, lifestyle, energy use, land use patterns, technology, and climate policy contribute to greenhouse gas emissions. According to the Intergovernmental Panel on Climate Change (IPCC) (2014), these are the broad forcings that drive nearly all human-caused greenhouse gas emissions. Greenhouse gas emissions by source is further discussed below.

Electricity and Heat Production

The burning of coal, oil, and natural gas to produce electricity and heat accounts for one-quarter of worldwide human-driven emissions, making it the largest single source (Hannun & Razzaq, 2022). In the United States, it is the second-largest source (behind transportation), being responsible for about 27.5 percent of U.S. emissions in 2017, with carbon dioxide the primary gas released (along with small amounts of methane and nitrous oxide), mainly from coal combustion.

Agriculture and Land Use Changes

About another quarter of global greenhouse gas emissions stem from agriculture and other land-use activities, such as deforestation. In the United States, agricultural activities—primarily the raising of livestock and crops for food—accounted for 8.4 percent of greenhouse gas emissions in 2017 (Pendrill et al., 2019). Of those, the vast majority were methane (which is produced as manure decomposes and as beef and dairy cows belch and pass gas) and nitrous oxide (often released with the use of nitrogen-heavy fertilizers). Trees, plants, and soil absorb carbon dioxide from the air. The plants and trees via photosynthesis (a process by which they turn carbon dioxide into glucose); the soil houses microbes that carbon binds to. Therefore, nonagricultural land-use changes such as deforestation, reforestation (replanting in existing forested areas), and afforestation (creating new forested areas) can either increase the amount of carbon in the atmosphere (as in the case of deforestation) or decrease it via absorption, removing more carbon dioxide from the air than they emit (de Oliveira Silva et al., 2016). When trees or plants are cut down, they no longer absorb carbon dioxide, and when they are burned or decompose, they release carbon dioxide back into the atmosphere. In the United States, land-use activities currently represent a net carbon sink, absorbing more carbon dioxide from the air than they emit.

Industry

About one-fifth of global human-driven emissions come from the industrial sector, which includes the manufacturing of goods and raw materials (like cement and steel), food processing, and construction (Didenko et al., 2017). In 2017, industry accounted for 22.4 percent of U.S. man-made emissions, of which the majority was carbon dioxide, though methane, nitrous oxide, and fluorinated gases were also released.

Transportation

The burning of petroleum-based fuels, namely gasoline and diesel, to power the world's transportation systems accounts for 14 percent of global greenhouse gas emissions. In the United States, with Americans buying larger cars and taking more flights and with low gas prices encouraging drivers to use their cars more, transportation is the largest contributor of greenhouse gases. Transportation accounted for 28.7 percent of U.S. emissions in 2017 (EPA, 2022). Carbon dioxide is the primary gas emitted, though fuel combustion also releases small amounts of methane and nitrous oxide, and vehicle air conditioning and refrigerated transport release fluorinated gases too. Nationwide, cars and trucks are responsible for more than 80 percent of transportation-related carbon emissions.

Buildings

Operating buildings around the world generates 6.4 percent of global greenhouse gases (EP, 2022). In the United States, homes and businesses accounted for about 11 percent of warming emissions (EPA, 2022). These emissions, made up mostly of carbon dioxide and methane, stem primarily from burning natural gas and oil for heating and cooking, though other sources include managing waste and wastewater and leaking refrigerants from air-conditioning and refrigeration

systems.

Other Sources

This category includes emissions from energy-related activities other than fossil fuel combustion, such as the extraction, refining, processing, and transportation of oil, gas, and coal. Globally, this sector accounts for 9.6 percent of emissions (EPA, 2022).

The Global North Project (2018) states that anthropogenic activities have added more than 2,000 billion metric tons of CO_2 into the atmosphere. North America and Europe are responsible for approximately half of that total, while the emerging economies of China and India have contributed another 14 percent (Global North Project, 2018). For the remainder, 150-plus countries share responsibility. An analysis of carbon dioxide emissions by country today shows that China now leads the pack, being responsible for 27 percent of all emissions. Next, comes the United States (15 percent), the European Union's 28 member states including the United Kingdom (10 percent), and India (7 percent) next. Together, these global powers account for almost 60 percent of all emissions.

Today's human-related greenhouse gas emissions are higher than ever, the concentration of greenhouse gases in the atmosphere is rising rapidly, and according to the IPCC (2018), the planet is heating up. Between preindustrial times and now, the earth's average temperature has increased 1.8 degrees Fahrenheit (1.0 degrees Celsius), with approximately two-thirds of that warming occurring in the last handful of decades alone. According to the IPCC (2018), the interval between 1983 to 2012 was likely the warmest 30-year period of the last 1,400 years (in the Northern Hemisphere, where assessment is possible). The years from 2014 to 2018 were the hottest on record globally. If warming trends continue at the current rate, it is estimated that global warming will reach 2.7 degrees Fahrenheit (1.5 degrees Celsius) above preindustrial

levels between 2030 and 2052 (IPCC, 2018).

Fueled by man-made greenhouse gas emissions, global warming is altering the earth's climate systems in many ways. It is causing more frequent and/or extreme weather events, including heat waves, hurricanes, droughts, and floods. Global warming is also exacerbating precipitation extremes, making wet regions wetter and dry regions drier. In addition, raising sea levels due to melting glaciers and sea ice and an increase in ocean temperatures (warmer water expands, which can contribute to sea level rise). At the same time, IPCC (2018) states that global warming is altering ecosystems and natural habitats, shifting the geographic ranges, seasonal activities, migration patterns, and abundance of land, freshwater, and marine species.

These changes pose threats not only to plants and wildlife, but directly to people. Warmer temperatures mean insects that spread diseases like dengue fever and Zika can thrive—and heat waves are getting hotter and more lethal to humans. People could go hungry when droughts and floods reduce food supply. For example, a 2011 National Research Council study found that for every degree Celsius that the planet heats up, crop yields will go down 5 to 15 percent (Cho, 2019). Food insecurity can lead to mass human migration and political instability (Winkler, 2017).

1.4 The Greenhouse Effect Solution

The earth has always experienced warm and cool phases, with natural forces—from the sun's intensity, volcanic eruptions, and natural changes in greenhouse gas concentrations—affecting how much energy from the sun our planet absorbs. Scientists say that as recently as a couple of centuries ago, the planet underwent a "Little Ice Age," caused by a decrease in solar activity and an increase in volcanic activity. But today's climatic warming—particularly the

increase in temperatures since the mid-20th century—is occurring at a pace that can't be explained by natural causes alone. According to NASA, "natural causes are still in play today, but their influence is too small or they occur too slowly to explain the rapid warming seen in recent decades" (NASA, 2010). In other words, humans are the problem, thus can be the solution. Humans have the ability to rein in greenhouse gas emissions, though doing so certainly won't be easy. Overhauling the energy systems will require transformative, aggressive global action—and now. According to the IPCC (2018), the society should reduce greenhouse gas pollution by 45 percent from 2010 levels by 2030 and reach net zero emissions by 2050. To allow global warming to exceed 1.5 degrees Celsius (which the IPCC has identified as the threshold for avoiding climate change's worst impacts) would mean more intense drought, extreme heat, flooding, and poverty, the decline of species (including a mass die-off of the world's coral reefs), and the worsening of food shortages and wildfires.

Reducing greenhouse gas emissions will require significant effort at the international, national, and local levels. 2011-2020 was the warmest decade recorded, with global average temperature reaching 1.1°C above pre-industrial levels in 2019. Human-induced global warming is presently increasing at a rate of 0.2°C per decade (IEA, 2022). In addition, the COVID-19 pandemic had far-reaching impacts on energy demand in 2020, reducing global CO_2 emissions by 5.2%. However, the world has experienced an extremely rapid economic recovery since then, driven by unprecedented fiscal and monetary stimulus.

1.5 Carbon dioxide

The main contributor to global warming is CO_2 from anthropogenic activities. Its atmospheric concentration had increased to 48%, which is a figure above the pre-industrial level. The recovery of energy demand in 2021 was compounded by adverse weather and energy market

conditions, which led to more coal being burnt despite renewable power generation registering its largest ever annual growth. Since 2020, emissions have increased by 2.1 Gt. This puts 2021 above 2010 as the largest ever year-on-year increase in energy-related CO_2 emissions in absolute terms (IEA, 2022). The rebound in 2021 more than reversed the pandemic-induced decline in emissions of 1.9 Gt experienced in 2020. CO_2 emissions in 2021 rose to around 180 mega tonnes (Mt) above the pre-pandemic level of 2019.

***Figure 1**: CO_2 Emissions from Energy combustion and industrial processes*

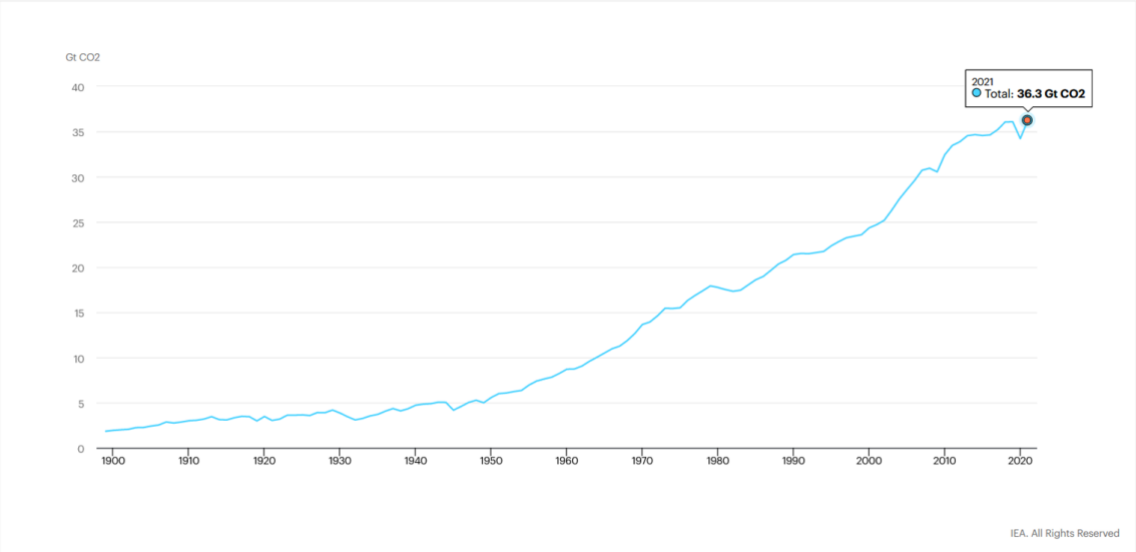

Source: IEA, 2022.

IEA, CO_2 emissions from energy combustion and industrial processes, 1900-2021, IEA, Paris

The 6% increase in CO_2 emissions in 2021 was in line with the jump in global economic output of 5.9%. This marks the strongest coupling of CO_2 emissions with Gross domestic product (GDP) growth since 2010, when global emissions rebounded by 6.1% while economic output

grew by 5.1% as the world emerged from the Global Financial Crisis (IEA, 2022). Global CO_2 emissions from energy combustion and industrial processes rebounded in 2021 to reach their highest ever annual level. A 6% increase from 2020 pushed emissions to 36.3 gigatonnes (Gt), an estimate based on the IEA's detailed region-by-region and fuel-by-fuel analysis, drawing on the latest official national data and publicly available energy, economic and weather data.

Figure 2: *Global anthropogenic emissions have continued to rise across all major groups of greenhouse gases*

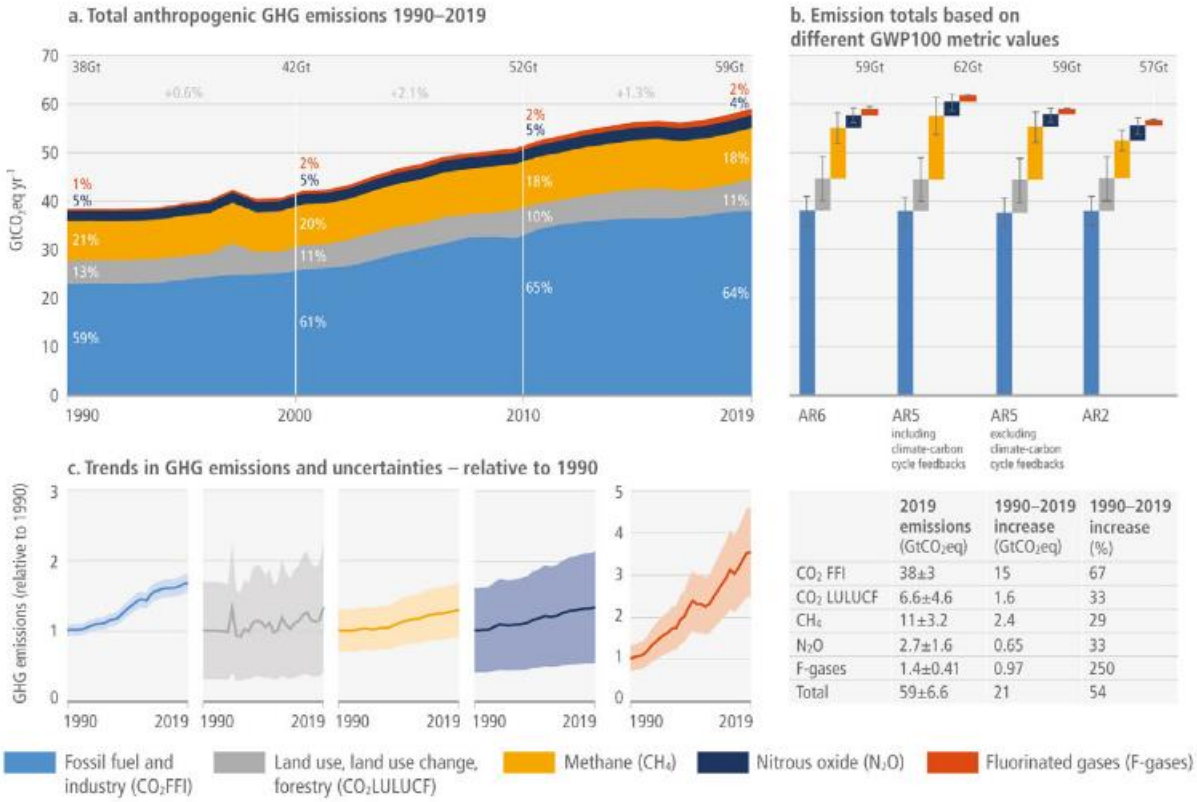

	2019 emissions ($GtCO_2eq$)	1990–2019 increase ($GtCO_2eq$)	1990–2019 increase (%)
CO_2 FFI	38±3	15	67
CO_2 LULUCF	6.6±4.6	1.6	33
CH_4	11±3.2	2.4	29
N_2O	2.7±1.6	0.65	33
F-gases	1.4±0.41	0.97	250
Total	59±6.6	21	54

Carbon dioxide (CO_2) is an important heat-trapping gas, or greenhouse gas, that comes from the extraction and burning of fossil fuels (such as coal, oil, and natural gas), from wildfires, and from natural processes like volcanic eruptions (Gillis, 2013). Since the beginning of industrial times (in the 18th century), human activities have raised atmospheric CO_2 by 50% – meaning the

amount of CO_2 is now 150% of its value in 1750. This is greater than what naturally happened at the end of the last ice age 20,000 years ago.

Figure 3: *Latest CO_2 Measurement*

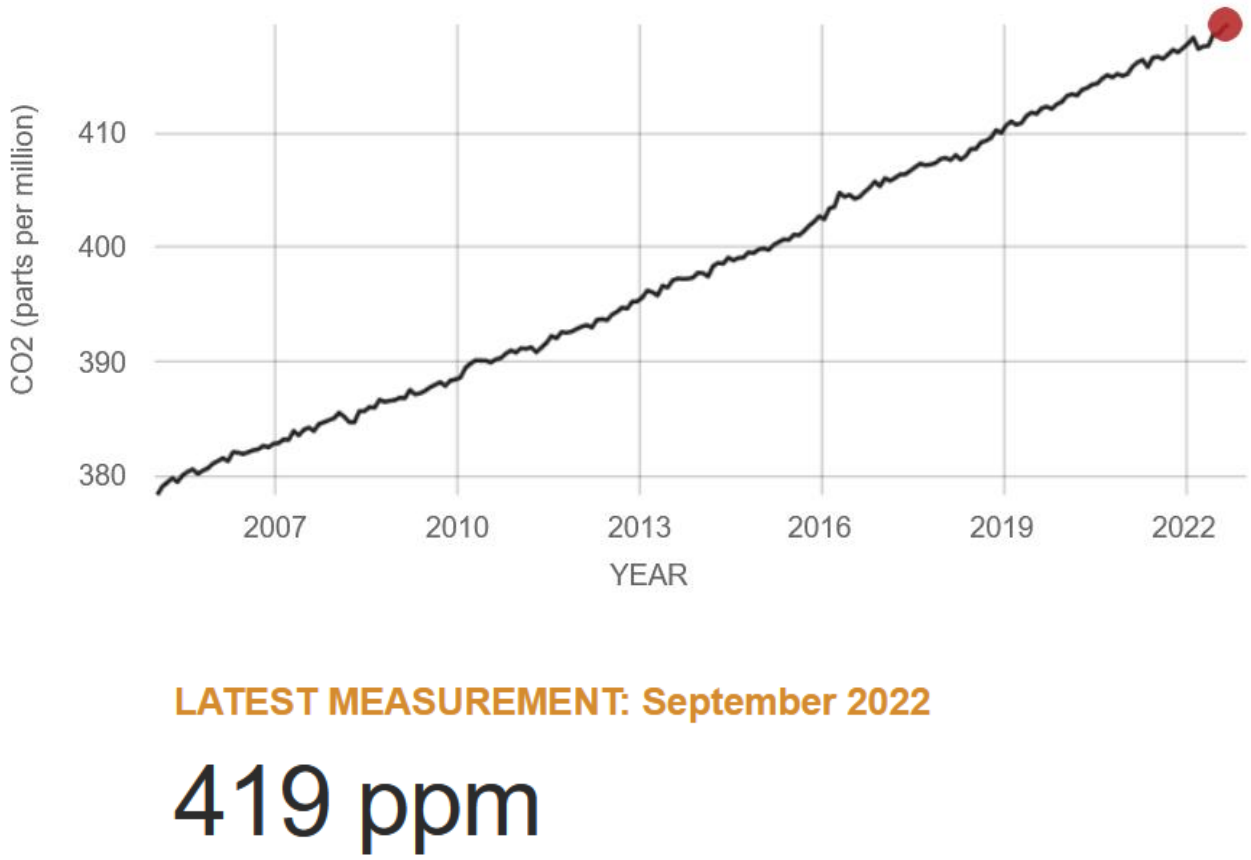

Importance of carbon dioxide

Carbon dioxide is Earth's most important greenhouse gas: a gas that absorbs and radiates heat. Unlike oxygen or nitrogen (which make up most of our atmosphere), greenhouse gases absorb heat radiating from the Earth's surface and re-release it in all directions—including back toward Earth's surface. Without carbon dioxide, Earth's natural greenhouse effect would be too weak to keep the average global surface temperature above freezing (Gadipelli, 2021). By adding more carbon dioxide to the atmosphere, people are supercharging the natural greenhouse effect,

causing global temperature to rise. According to observations by the NOAA Global Monitoring Lab, in 2021 carbon dioxide alone was responsible for about two-thirds of the total heating influence of all human-produced greenhouse gases.

Another reason carbon dioxide is important in the Earth system is that it dissolves into the ocean like the fizz in a can of soda (Gadipelli, 2021). It reacts with water molecules, producing carbonic acid and lowering the ocean's pH (raising its acidity). Since the start of the Industrial Revolution, the pH of the ocean's surface waters has dropped from 8.21 to 8.10. This drop in pH is called *ocean acidification*.

Past and future carbon dioxide

Natural increases in carbon dioxide concentrations have periodically warmed Earth's temperature during ice age cycles over the past million years or more. The warm episodes (interglacials) began with a small increase in incoming sunlight in the Northern Hemisphere due to variations in Earth's orbit around the Sun and its axis of rotation. That little bit of extra sunlight caused a little bit of warming. As the oceans warmed, they outgassed carbon dioxide—like a can of soda going flat in the heat of a summer day (Gadipelli, 2021). The extra carbon dioxide in the atmosphere greatly amplified the initial, solar-driven warming. Based on air bubbles trapped in mile-thick ice cores and other paleoclimate evidence, atmospheric carbon dioxide never exceeded 300 ppm during the ice age cycles of the past million years or so. Before the Industrial Revolution started

in the mid-1700s, atmospheric carbon dioxide was 280 ppm or less.

By the time continuous observations began in 1958, global atmospheric carbon dioxide was already 315 ppm. Carbon dioxide levels today are higher than at any point in human history. In fact, the last time atmospheric carbon dioxide amounts were this high was more than 3 million years ago, during the Mid-Pliocene Warm Period, when global surface temperature was 4.5–7.2 degrees Fahrenheit warmer than during the pre-industrial era. Sea level was at least 16 feet

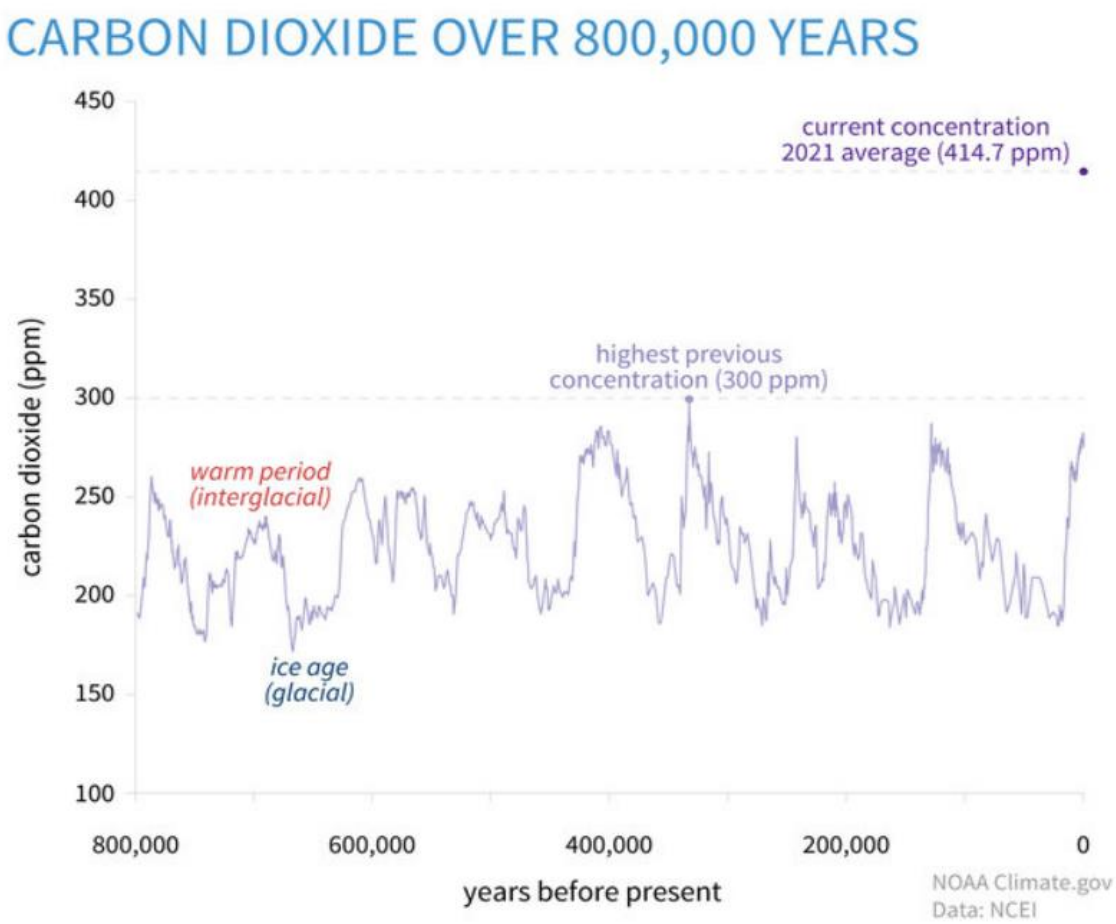

higher than it.

Figure 4*: Carbon dioxide over 800,000 years*

was in 1900 and possibly as much as 82 feet higher.

If global energy demand continues to grow rapidly and we meet it mostly with fossil fuels,

human emissions of carbon dioxide could reach 75 billion tons per year or more by the end of the century. Atmospheric carbon dioxide could be 800 ppm or higher—conditions not seen on Earth for close to 50 million years.

The atmospheric CO_2 increase above pre-industrial levels was, initially, primarily caused by the release of carbon to the atmosphere from deforestation and other land-use change activities (Canadell etal., 2022). While emissions from fossil fuels started before the Industrial Era, they became the dominant source of Anthropogenic emissions to the atmosphere from around 1950 and their relative share has continued to increase until the present. Anthropogenic emissions occur on top of an active natural carbon cycle that circulates carbon between the reservoirs of the atmosphere, ocean, and terrestrial biosphere on timescales from sub-daily to millennial, while exchanges with geologic reservoirs occur on longer timescales (Archer et al., 2009).

The lockdowns that many countries implemented led to the acceleration of certain trends, including urban cycling. COVID-19's impacts may have stifled development and the attainment of numerous SDGs. It also distracted financial and political commitment from efforts for hastening climate change mitigation. However, previous studies done on pandemics and shock periods insinuate that crises accelerate waves of impending innovations, initiating rapid reform, prompting new behaviors, and weakening incumbent systems.

Figure 5*: Global Carbon Cycle*

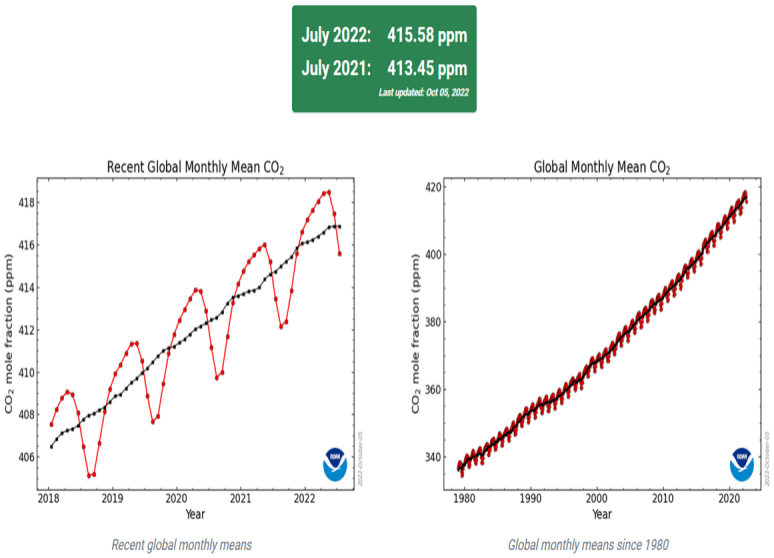

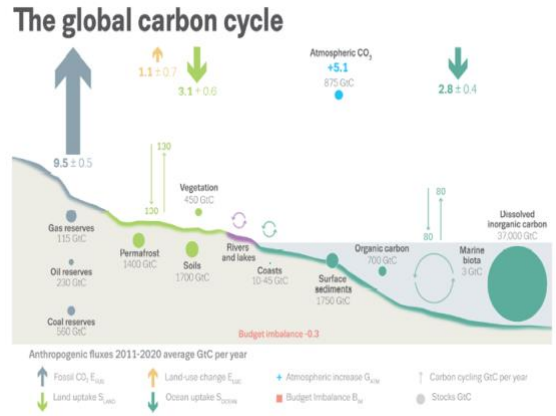

Transitioning to a low-carbon economy is premised on various closely intertwined factors and challenges, including technologies and policies where significant advances during the last decade have paved way for large-scale opportunities to deeply decarbonize, and development pathways that could drive socio-developmental goals (Grainger & Smith, 2021). Developing and using innovative systems and technologies is important to achieve decarbonization. Recently, the cost of a number of low carbon technologies has reduced sharply due to rapid deployment.

1.6 Policies and Investment

The Paris Agreement developed a new policy architecture to meet climate goals, while addressing challenges arising from the Kyoto Protocol. However, current national pledges under the agreement are not adequate to reduce warming to 1.5°C and would need mitigation efforts to be accelerated after 2030 to reduce warming to 2°C (Leahy et al., 2020). Many wealthy nations, together with an increasing number of developing states have indicated that they intend to attain net zero GHG emissions unlike before. Indirect and direct climate legislation has steadily risen

as supported by more financial investors. However, numerous net zero targets are not well-defined, and policies required to achieve them have not yet been put in place. Barriers to developing and implementing strict climate policies to covers all sectors include inadequate low-carbon financial flows and resistance from status quo interests. In addition, mandatory policies, regulation and pricing, have increased and been complemented with the expansion of mitigation policies. Carbon taxes and emissions trading currently cover more than 20% of the global Carbon dioxide emissions (Thisted & Thisted, 2020). As of April 2021, allowance prices ranged from slightly over $1-$50, accounting for between 9 and 80 percent of a jurisdiction's emission. Numerous sectoral regulations have been introduced by states that block new fossil fuel technology investment.

2.0 ECONOMICAL DATA ON GLOBAL CO_2 TAXATION

2.1 Background

In light of the challenges occasioned by the climate crisis and the ambitious climate targets globally, climate groups, businesses, and lawmakers have expressed support for the enactment of a carbon tax. For example, in July 2019, a carbon tax bill was introduced by Rep. Dan Lipinski, Sen. Christopher Coons, and Rep. Francis Rooney on carbon emissions, with revenue generated proposed to be allocated for measures such as investments in infrastructure and innovation, payroll tax cuts, and carbon dividends (Wendler, 2022). Businesses in industries such as transport, food, and energy have publicly recommended for federal climate action, which includes imposing a price on carbon (Luo et al., 2022). Thus, carbon pricing, through a CO_2 tax, and its impacts have attracted rising attention in environmental, economic, and academic policy discussions. By May 2022, the World Bank (2022) reported that 46 jurisdictions had initiated carbon pricing schemes, covering 23% of GHG emissions globally. out of the 46 jurisdictions, 36 of them apply a carbon tax, making up about 5.7% of the GHG emissions worldwide. The rates of carbon tax lie in a wide range between $0.08 and $129.89 for every ton of CO_2 in Poland and Sweden respectively. This also manifests for the ration of national greenhouse gas emissions that the carbon tax covers, ranging from 2.9% to 98% in Spain and Norway respectively. According to economists, an appropriately-designed carbon tax is the best economic way to minimize carbon emissions (IMF, 2019). A carbon tax is basically a consumption-based tax, which refers to taxes that generate revenue with less distortionary impacts compared to income taxes, enhancing economic efficiency. A carbon tax's economic impact varies based on how the government uses the generated tax revenues. For example, using such revenues to minimize a more distorting tax type can positively impact the economy. Evidence indicates that 44% of the carbon tax revenues

generated in jurisdictions globally in 2013 were utilized to reduce other taxes, 15% were allocated for environmental expenditure, while 28% were general government funds (Carl & Fedor, 2016). This section discusses the economic data available on carbon taxes and whether using such taxes to reduce global warming and environmental degradation attributed to climate change makes economic sense.

2.2 Rationale for a Carbon Tax

IPCCC (2018) points out that carbon emissions have rapidly been driving global alterations in temperatures, and imposing detrimental costs on natural, human, and economic systems. The main role of a carbon tax is to price carbon emissions to minimize the quantity of carbon within the atmosphere as well as mitigate the adverse climate change impacts. For example, the US committed to reduce 26-28% GHG emissions as stipulated by the Paris Agreement by 2025, but has fallen short since the current policies have enabled it to clock 18-22% below the 2005 levels (Larsen et al., 2018). Carbon pricing has been identified as key for reducing carbon emissions and meeting climate goals. Economists classify the carbon tax as a Pigouvian tax. Conceptually, a Pigouvian tax is a market transaction tax designed to generate a negative externality or an extra cost on individuals not directly involved within the transaction bear (Pigou, 1924). People create a negative externality when they buy goods created as a result of a carbon-intensive production process. For carbon emissions, carbon accumulation in the atmosphere can contribute to climate change. Such a negative externality compels those who did not participate in the initial process of producing and buying the good to bear the cost. External environmental costs are internalized by being added to the commodity price. Consequently, the good’s producer and consumer pay for the cumulative cost of the good, including external environmental costs. Such costs discourage them from using carbon-intensive products, resulting

in lower carbon emissions. Besides pricing carbon emissions, the other importance of a carbon tax is that it raises more federal revenue that can be utilized to minimize government deficits, reform taxes, or develop more government programs. For instance, numerous carbon tax proposals combine a carbon tax and new government program that would refund Americans the carbon tax to offset its cost on living standards. Pomerleau and Asen (2019) state that other proposals would utilize some of the carbon tax revenue to minimize other taxes, including payroll or income taxes. Ultimately, a well-designed carbon tax would incentivize people to reduce carbon emissions and mitigate the negative externality. Thus, governments would not have to price carbon emissions.

2.3 Environmental Effectiveness

Anderson (2004) summarized a number of evaluation studies unanimously illustrating that the carbon tax played a significant role in reducing CO_2 emissions within Sweden and reduction of this tax led to a CO_2 emission increase. The study demonstrates that redistribution of carbon tax revenues to the sector to finance energy efficiency improvements led to significant emission-reducing impacts in the sector. A study of the Swedish industry in the 1990-2004 period by Brännlund et al. (2014) found a reduction in all sectors explored, pointing to a decoupling of CO_2 emissions and production growth predominantly influenced by the Swedish carbon tax. On the other hand, Andersson (2019) found that carbon tax cut CO_2 emissions within the transport industry by an average of 6% per annum in the 1990-2005 period. A recent analysis by Runst and Thonipara (2020) used several econometric methods and demonstrated that raising Swedish carbon tax in the period 2001-2004 substantially reduced residential carbon emissions. A key finding was that the carbon tax's effectiveness was determined by its level.

Similarly, Larsen and Nesbakken (1997) demonstrate a reduction of Norway's household sector emissions by 3-4 percent between 1991 and 1993. Many ex-post studies done during the last two decades, predominantly focusing on EU states and especially on the Nordic states. The same finding was established by Sairinen (2012) in a study of Finland where energy and carbon taxation resulted in more than 7% lower CO_2 emissions between 1990 and 1998. Another study established that the Finnish carbon tax reduced carbon emissions by 16%, 25%, and 31% in 1995, 2000, and 2005 respectively (Mideksa, 2021). Concomitantly, studies have found a modest reduction of carbon emissions by 2.3% between 1991 and 1999 due to the Norwegian carbon tax (Bruvoll & Larsen, 2004). Mideksa and Kallbecken (2012) established that the Norwegian carbon tax resulted in a cumulative reduction of 55 Mt CO_2 emissions between 1991 and 2005.

There has been less research of the effectiveness of carbon taxes in other European states than for Scandinavian states. Martin et al. (2014) established that the Climate Change Levy reduced electricity use, carbon emissions, and energy intensity by 22.6%, 8.4%, and 18.1% between 1999 and 2004. On the other hand, Dussaux (2020) demonstrates a 1% to 5% reduction of CO_2 emissions as a result of the French carbon tax during the 2014-2018 period. An analysis of the impact of the Swiss carbon tax between 2008 and 2015 established that it reduced 6.9 million tons of CO_2 (4.4% of carbon emissions) (Ott & Weber, 2018).

In non-European jurisdictions, the British Columbia carbon tax effectively reduced CO_2 emissions by between 5 and 15% (Murray & Rivers, 2015), 5% and 8% (Metcalf, 2019), 9% between 2008 and 2011 (Elgie & McClay, 2013) since its implementation. In contrast, Pretis (2022) used several econometric approaches and established that carbon taxes and prices reduced CO_2 emissions by 5% within the transport industry. However, the study stated that aggregate

CO_2 emissions did not reduce between 2008 and 2016 since the carbon prices and taxes were too low to have any substantial effect. Furthermore, the British Columbia carbon tax minimized gasoline consumption by 8% (Lawley & Thivierge, 2018), reduced fossil fuels' per capita consumption by 19% during the 2008-2012 period (Elgie & McClay, 2013), and minimized fuel demand (Rivers & Schaufele, 2015).

Only a few studies examine the effectiveness of carbon taxes due to the lack of data on effective tax rates across countries on all sectors and sources of energy (Koppl & Schratzenstaller, 2022; Rafaty et al., 2020). Fernando (2019) used a synthetic control method to study Sweden, Norway, Denmark, and Finland. The study showered that Norway has had the highest reduction of per capita carbon emissions by implementing carbon tax followed by Sweden. However, the emissions reducing impacts of the carbon tax in Danish and Finnish jurisdictions are less clear. The results differ from Lin and Li (2011) who identified a negative effect of Finnish carbon tax on the increase of CO_2 emissions per capita. The effect in the Netherlands, Denmark, and Sweden was also negative, but not substantial, while Norway's impact was negligible. Transport and energy taxes within 15 European Union states have also been found to significantly reduce emissions between 1995 and 2013 in Sweden, affirming the study findings by Runst and Thonipara (2020) (Aydin & Esen, 2018). For 15 EU states, a carbon tax of $40/ton imposed on CO_2 emissions covering about one third of emissions results in 4% to 6% emission reductions. Kohlscheen et al. (2021) established that imposing a $10/ton carbon tax rate reduces the emission of CO_2 by 1.3% and 4.6% in the short and long term.

Overall, many studies demonstrate that carbon taxes effectively cut CO_2 emissions or at least stagnate their growth. However, the existing empirical findings for individual states differ

because of different methodological designs and databases used. The time period that this was done is also important (Andersen, 2004). Thus, comparing individual studies' results is almost impossible. Carbon taxes' effectiveness is also determined by tax designs and diverse economic conditions (such as the energy system's structure and presence of low carbon alternatives. Moreover, the current empirical research demonstrates that the magnitude of the impacts is modest and inadequate to achieve current medium and long-term emission objectives as national and international plans and agreements stipulate (Green, 2021). According to Green (2021), this is likely because many countries' tax rates are moderate. Appendix 1 demonstrates that many countries with carbon tax have limited scopes and rates. Metcalf and Stock (2020b) contend that states apply carbon taxes to sectors the EU Emission Trading System does not cover, lowering the total impact of the tax. Globally, Edenhofer et al. (2021) aver that many taxes tackling fossil energy are significantly lower than carbon's marginal social costs. In addition, only a few states have introduced sufficient carbon taxes that can enable them to attain the Paris Agreement goals (Klenert et al., 2018). Empirical evidence also insinuates that demand is more responsive to long-term rather than short-term carbon price fluctuations (Anderson, 2019). Thus, Antweiler and Gulati (2016) insinuate that data on the permanency of carbon pricing mechanisms can strengthen their effectiveness by minimizing uncertainty regarding future prices for households and investors. Ample evidence also suggests that carbon pricing does not improve climate-friendly behavior, but contributes to "motivational crowding in" (Baranzini et al., 2017).

2.3 Carbon Tax Design Implications

A tax's design ultimately determines the economic, environmental, distributional, and revenue implications. Policymakers should make decisions about the taxation point, the tax base, tax rate, border adjustments, and consider behavioral responses. Regarding the tax base,

governments can levy taxes on carbon emissions and other GHGs. Carbon emissions from the combustion of fossil fuels make up more than 75% of all GHGs, thus are targeted by a carbon tax. It is worth noting that taxing GHGs other than energy-related carbon emissions is administratively more daunting since their source extends beyond fossil fuels (Horowitz et al., 2017). However, it is easier to abate some non-carbon emissions, implying that their marginal abatement costs are comparatively lower (EPA, 2019a). In this regard, widening the tax base to cover GHGs other than carbon emissions can reduce abatement costs. The EPA reported that carbon emissions related to energy constituted 76.1% of all GHGs emitted in 2017. Industrial processes contributed to 5.6% of the carbon emissions, while landfills, agriculture, and energy production emitted methane that made up 10.2% of the carbon emissions. Nitrous oxide and fluorinated gases made up 5.6% and 2.6% respectively (EPA, 2019b), as illustrated in the figure below. Burning a single unit of a fossil fuel often emits the same quantity of carbon, establishing a correlation between fossil fuels and carbon emissions. Thus, it is not mandatory to levy a carbon tax when carbon is emitted. Rather, it can be imposed on the fossil fuels' carbon content. In this regard, it is not necessary to measure each individual's and business' carbon emission.

Figure 6*: US GHG Emissions by Gas, 2017*

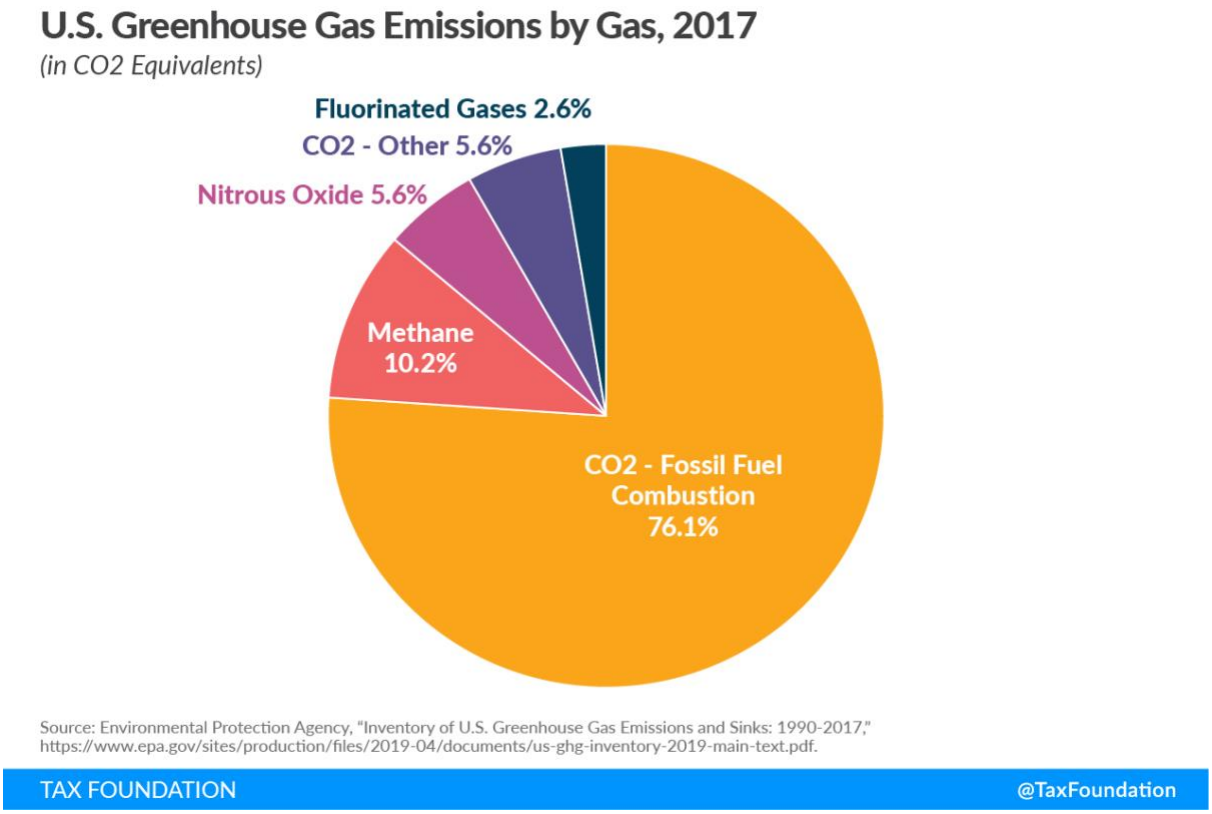

Source: Pomerleau, & Asen (2019).

Regarding the point of taxation, there are various supply chain points where the government can levy a carbon tax. However, it is worth noting that a number of aspects, including the administrative efficiency and scope of the tax base ascertain the taxation's optimal point. Overall, the government can levy taxes at the fuel production point (upstream), fuel consumption point (downstream) or at various points in the middle (midstream). While studies such as Metcalf and Weisbach (2009) recommend levying the carbon tax on fuels upon their entry into the economy (for example, when oil is refined, coal extracted, and natural gas processed) to cover about 80% of all emissions. In contrast, other arguments advocate for taxation at the consumption point to make it more visible to users or consumers. Finally, many carbon tax proposals also advocate for a border adjustment to address two carbon tax concerns: leakage and competitiveness.

2.4 Carbon Tax Revenue Implications

Pomerleaun and Asen (2019) estimated that enacting a $50/metric ton carbon tax would generate $1.87 trillion federal revenue between 2020 and 2029. During this period, they estimated that the carbon tax would lead to the collection of receipts worth $2.6 trillion. In contrast, the carbon tax would reduce the income and payroll tax, IPT, revenue, a phenomenon known as the "excise tax offset." The payroll and income tax offset can happen for two independent reasons or an amalgamation of both. The first reason is if the tax is passed back to the production factors and the producer entirely bears it, then the tax cuts some combination of labor compensation and business profits. The second way is that the tax can be passed forward through higher prices. It is worth noting that higher prices reduce the income available to consumers for buying other services and goods. The sectors impacted by lower consumption see revenue reduction, leading to lower labor compensation and profits (Joint Committee on Taxation, 2011). The size of the payroll tax and income offset is determined by the tax structures and tax rates.

According to the Joint Committee on Taxation (2018), there is an income and payroll tax offset of about 25%. It implies that every excise tax revenue dollar sees a decline in income and payroll tax, thus compensating $0.25 of the excise tax revenue. The Joint Committee (2018) predicted that the IPT offset will be about 22% until 2026, when it will rise to about 24% after the TCJA expires. A slightly higher income between 26% and 30% is predicted by the Tax Foundation model during the next 10 years (Joint Committee on Taxation, 2011). The Joint Committee's estimates in the past have ranged between 25% and 35%. Pomerleaun and Asen (2019) contends that a carbon tax distorts goods' relative prices, encouraging investment towards low carbon-intensive production processes and reducing taxable carbon emissions, hence reducing the tax base. A carbon tax and current law present uncertainties on how to predict the

speed of energy mix changes, technological changes, and demand of carbon-intensive commodities. According to Pomerleaun and Asen (2019), a carbon tax would reduce carbon emissions to 80% of the baseline during the first five years, and 75% in the subsequent five years (24).

Table 1*: Revenue Impact of a $50/Metric Ton Carbon Tax, Escalating at 5% p.a., 2020-2029 (Billions of Dollars)*

	2020	2021	2022	2023	2024	2025	2026	2027	2028	2029	2020-2029
Gross Revenue	$251	$249	$250	$249	$247	$255	$264	$271	$281	$290	$2607
Net Revenue (after offsetting Excise Tax)	$181	$180	$180	$179	$178	$184	$190	$195	$202	$209	$1877

2.5 Macroeconomic Impacts of Carbon Taxes

Fears about potential negative effects of carbon taxes on major macroeconomic variables, including employment or GDP, were raised in the political and theoretical discourse from the start, leading to governments to become reluctant to roll out carbon taxes. Such concerns led to the development of the double dividend hypothesis (DDH), which states that recycling carbon tax revenues by cutting distortionary taxes could result in economic and environmental benefits. It is vital to understand the economic effect of carbon taxes and the DDH. British Columbia is the most researched individual jurisdiction. Various studies have established that the British

Columbia carbon tax had negligible impact on economic growth (Elgie & McClay, 2013; Murray & Rivers, 2015; Metcalf, 2019), aggregate employment (Azevedo et al., 2018), but some studies have found that it led to a 4.5% increase in employment between 2008 and 2016 (Benard et al., 2018). Nordic countries lack case studies, but one evaluation of its tax reform by Withana et al. (2013), particularly the 1992 carbon tax, established that it has a small impact of economic growth between 1990 and 1995 at 0.3% of the GDP. A long-term rise in GDP between 0.4% and 0.5% is identified by Andersen et al. (2007) for Sweden, Finland, and Denmark, but long-term annual GDP slightly reduced in the UK and Slovenia. Metcalf and Stock (2020a) found no compelling evidence of a negative impact of the tax on GDP growth or employment in EU states. Thus, this demonstrates that carbon taxes are not growth or job killers as established by some studies, at least for the European experience. Metcalf and Stock (2020b) conducted another cross-country analysis for 15 EU carbon tax states and did not find adverse impacts on employment and GDP growth. It is challenging to identify factors that explain the positive or neutral impacts on macroeconomic performance because of the varying carbon taxation design in various countries without conducting further in-depth analysis. Notwithstanding, Andersen and Ekins' (2009) analysis exploring British Columbia's revenue-neutral carbon tax insinuates that one major factor is full revenue recycling through lowering contributions to social security.

The DDH combines the environmental and the economic carbon taxation dimensions and argues that using revenues from environmental taxes to lower distortive taxes can result in a double dividend (Goulder, 2013); a first one by attaining a particular environmental objective, and a second in terms of positive macroeconomic impacts (economic or employment growth). A review of 56 studies by Bosquet (2000) on the impact of environmental tax reforms on a double dividend, including carbon taxes, established that 54% of simulations on personal income tax

deductions found a positive or zero effect on employment. Thus, social security reductions are more effective, as 86% of relevant simulations found that there was no or positive impact on employment. Freire-Gonzalez (2018) established that 55% of environmental tax reform simulations (about 25% applied energy taxes, while 75% uses carbon taxes) produced a double dividend. The central finding is that both recycling and tax policies determine an employment double dividend. Furthermore, Yamazaki (2017) established that British Columbia carbon tax recycling schemes positively impacted employment, corroborating Murray and Rivers' (2015) findings. It is also worth noting that the long-term carbon tax potential to fund tax reductions or other recycling measures will reduce. The existing national and international climate commitments and agreements envisage that significant and successful emissions reduction will substantially reduce the potential tax base, hence the tax's revenue raising potential (Speck, 2017).

2.6 Carbon Tax's Distributional Implications

Empirical studies have focused on carbon tax's distributional consequences for more than 30 years. The categories of empirical approaches include household consumption and macroeconomic feedbacks. Various studies have established varying regressive impacts of carbon taxes for the US (Mathur & Morris, 2014), Sweden (Brannlund & Nordstrom, 2004), UK (Symons et al., 1994), Ireland (Callan et al., 2009), and the Netherlands (Kerkhof et al., 2008). However, Douenne (2020) establishes a slight proportional or regressive effect for French carbon tax. Similarly, Labandeira and Labeaga (1999) find that a hypothetical carbon tax has a proportional impact. On the other hand, the British Columbia carbon tax was found by Beck et al. (2015) to be quite progressive. A multi-country input-output model employed by Feindt et al. (2021) demonstrated that carbon taxation would be predominantly proportional, but occasionally

progressive. However, these findings differ from Symons et al. (2002) study, with a similar model, established that carbon taxes were most regressive for Spain, Germany, and France, not regressive for the UK, and less regressive for Italy. Cumulatively, empirical studies on high-income states demonstrate that without compensation mechanisms or revenue recycling, a carbon tax usually has a regressive impact (Wang et al., 2016). Lower-income groups particularly spend a higher percentage of their income on carbon-intensive goods. Ohlendorf et al. (2021) supports this finding on carbon taxes' regressive impacts on 39 developing and developed countries, establishing that about 67% of the distributional impacts are regressive. However, it is worth noting that the empirical research on distributional effects examined above fail to distinguish between various energy uses. As Pizer and Sexton (2019) highlighted about energy taxes, incidence is premised on the energy use.

Earlier empirical studies for the US established regressive impacts for transport fuel taxes (Porteba, 1991). However, Tiezzi (2005) detected that energy taxes levied on Italy's transport industry had a slightly progressive impact. Contrary to transport fuel levies, electricity and heating taxes were found to have a regressive effect for Nordic states (Kosonen, 2012), but the proportions for fuel spending are lower within the low-income group and grow with income. Concomitantly, Wier et al. (2005) established regressive impacts for electricity and heating fuels for a Danish carbon tax. Feng et al. (2010) also found the UK carbon tax on housing CO_2 emissions to be strongly regressive, while transport sector taxes was linked with slightly progressive impacts. These findings are supported by Sterner (2012) who explored the distributional impacts of taxes on transport sector fuels within seven European states (Sweden, UK, France, Spain, Serbia, Italy, and Germany). Only Spain and Sweden have a weak regressive impact on an income basis, while the tax burden for the other countries is proportional across

income groups. This effect disappears and does not occur for Serbia as the poorest nation among these countries, based on lifetime incomes. An extensive survey of G20 countries demonstrates that transport fuel taxation is predominantly progressive, while heating fuel and electricity taxes are regressive (McInnes, 2017). At the same time, Flues and Thomas (2015) focused on 21 EU countries' energy taxes and established that transport fuel taxes on an expenditure basis are not regressive. This explains why lower expenditure deciles have less spread of car ownership. In addition, energy taxes that affect heating fuel are often mildly regressive, while taxing electricity has more significant regressive impacts. Finland is the only EU country in the study that levies a significant carbon tax. This tax is regressive with respect to electricity and heating fuels. The middle income bears the largest burden as demonstrated by an inverted U-shape across various spending deciles in the transport sector, while the tax is proportional across all income groups. Other studies have also found that middle income households tend to bear the comparatively high burden from fuel taxes (Eliasson et al., 2018). From Ohlendorf et al. (2021) meta-analysis, it can be deduced that there is a higher likelihood of identifying progressive impacts for lower income states when considering lifetime incomes and a wide range of economic aspects, including demand and indirect-side effects. Many developed countries' studies also find a regressive effect of the carbon tax (Wang et al., 2016). More progressive taxes also tend to be lower when average national incomes are low (Andersson & Atkinson, 2020).

According to Rausch et al. (2011), it is important to consider both vertical and horizontal distributional effects, which is differences about household types, race, or regions, since they impact spending patterns and carbon taxes affect them. Cronin et al. (2019) illustrate that horizontal distributional impacts occasioned by a carbon tax are significantly larger than the vertical ones for the US. For example, heterogeneous geographical effects of carbon taxes is a

relevant horizontal dimension. A carbon tax was found to have more impact on rural households in the UK (Feng et al., 2010), while larger families are not adversely impacted in Denmark (Wier et al., 2005) and Ireland (Callan et al., 2009). According to Feng et al. (2010), the socioeconomic status is also important since disadvantaged families are more impacted by a carbon tax within the UK due to limited low carbon alternatives. In addition, various studies emphasize the importance to consider the effect of carbon taxation on consumer prices and potential impacts on factor prices (Goulder et al., 2019; Metcalf, 2021). Cronin et al. (2019) emphasize the important role played by measures used for capturing carbon taxes' distributional effects. Overall, regressive impacts are less pronounced when using expenditures instead of annual incomes.

2.7 Conclusions

Carbon taxes should be considered in a broader perspective in the climate change context, and transitioning to climate neutrality needs a significant structural change. This means that the focus should be a holistic policy mix that integrates various policy interventions, including public infrastructure investments, standards, price-based instruments, and subsidies. Strategically combining climate change measures can lead to substantial synergies. In addition, because of the urgency of emissions reduction, policy instruments that can spur a structural change are needed. While carbon taxes are inadequate as a standalone solution, one of the core pillars of environmental pillars has been pricing negative externalities. Critical to carbon pricing is the particular policy design, especially regarding distributional impacts, which influence public acceptance. Notably, empirical evidence is increasingly showing that carbon taxes can effectively minimize carbon emissions or at least reduce their growth without substantial impact on employment and economic growth. Carbon taxes also have negligible negative effect on firms' competitiveness. However, there is a lack of convincing evidence that puts a price on carbon to

initiate the technological change required to fully decarbonize the society and economy. Generally, fuel taxes have a progressive impact in numerous states, while heating fuel and electricity taxes are regressive.

3.0 BASIC TECHNOLOGIES OF CARBON CAPTURE

3.1 Background and Definitions

Rehman and Lal (2022, p.22) define carbon capture as "a method that involves capturing CO_2 from major sources (fuel-fired power stations), transporting it by pipeline, and then permanently burying it under the subsurface." Carbon capture and storage (CCS) is an amalgamation of technologies for preventing the release of CO_2 produced through conventional industrial production and power generation processes. It is achieved by injecting the CO_2 in appropriate underground storage reservoirs.

***Figure** 7: CCS process*

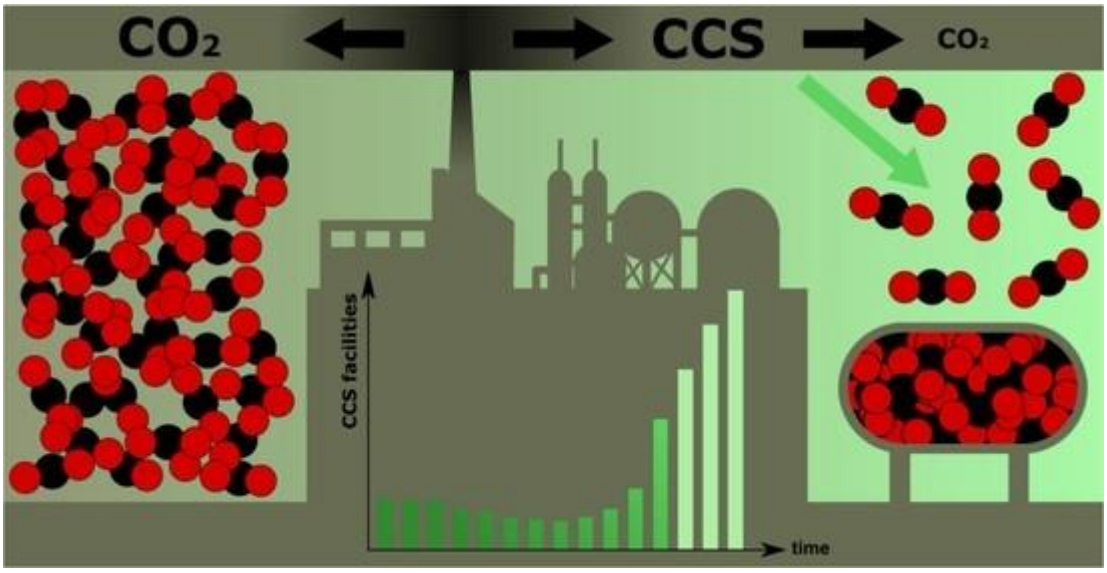

Source: Madejski et al. (2022)

From the outset, capture technology separates CO_2 and its compressed form is transported to a suitable location and injected. Feasible CO_2 transporting methods include shipping and pipelines, while suitable geological storage locations include deep saline formations, abandoned gas and oil fields, and coal seams that cannot be mined. As earlier mentioned, the main reason

for CCS is to reduce the CO_2 emissions from power generation and industry. Deploying CCS can allow the use of fossil fuels to continue without substantial reduction in CO_2 emissions. Notwithstanding, there is no full CCS chain in place yet, and many economic, technical, and environmental uncertainties remain. Various technologies are deployed to capture, transport, and geologically store CO_2. Notably, majority of the research and developed has focused on efficiency enhancements in the technologies used for separating CO_2 from other compounds usually emitted by industrial processes. Capture processes can be categorized into three groups, where the appropriateness of each approach is determined by the type of power plant or industrial process.

3.2 $C0_2$ Collection Processes in Today's Fuel-fired Power Plants

Figure 8 below summarizes the carbon capture processes, from pre-combustion, to oxy-combustion, and post-combustion.

Figure 8: *Carbon Capture Processes*

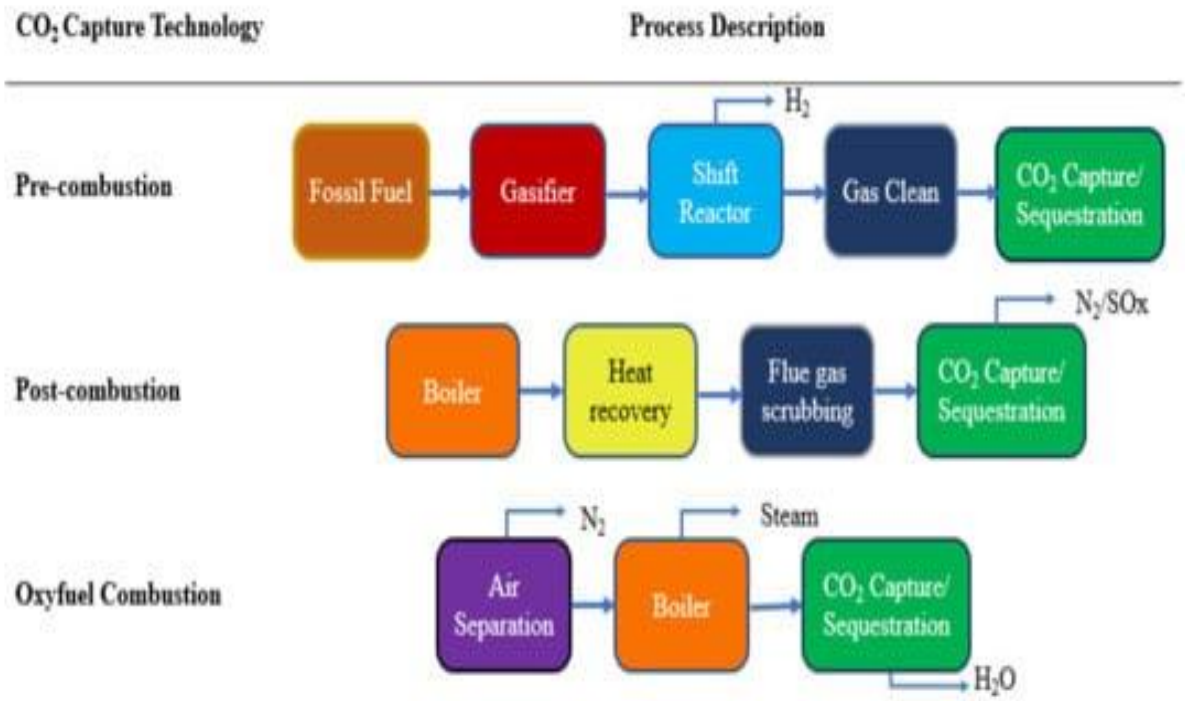

Source: Rehman & Lal, 2022.

3.2.1 Pre-combustion:

The process' primary fuel is reacted with air and steam, and converted to a combination of hydrogen and monoxide, usually referred to as a syngas. The carbon monoxide is then converted to CO_2 within a shift reactor. Separation of the CO_2 can then be done and the hydrogen used for generating heat and/or power. Pre-combustion technology is suitable for integrated gasification combined cycle power plants as illustrated in the Figure 9 below.

Figure 9*: Example of pre-combustion CO_2 capture method*

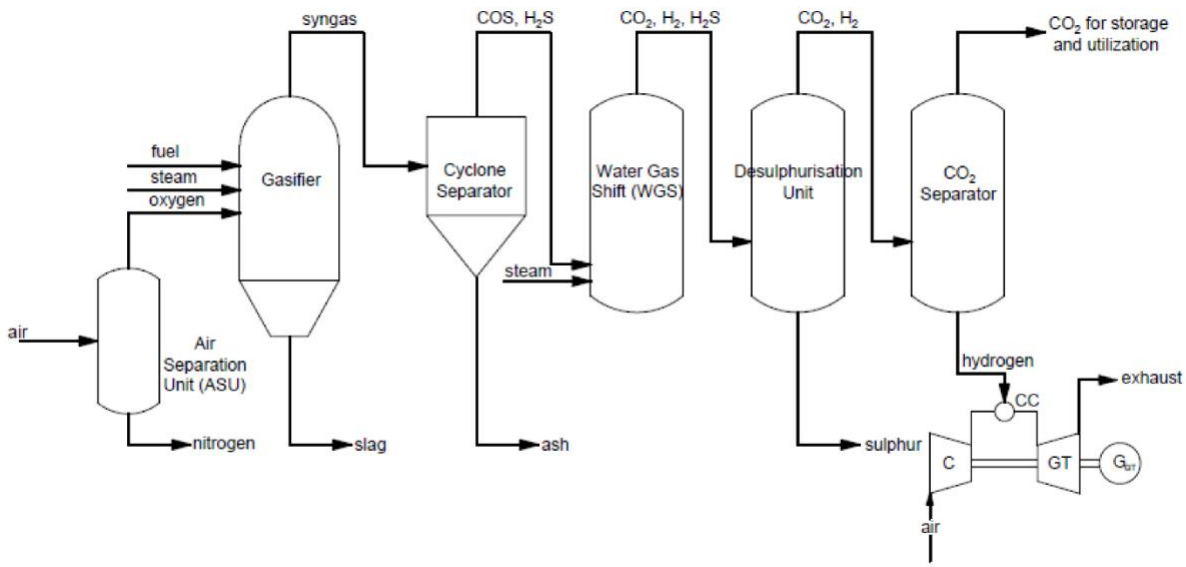

Source: Madejski et al. (2022).

In the process, oxygen and steam are added to the gasifier to produce syngas. The syngas is then transported to a cyclone separator to remove ash through filtration. Next, steam and syngas are converted to H_2 and CO_2 within the water-gas shift reactor. It is followed by purification of the received gas to get rid of sulfur within the desulfurization unit. CO_2 is then captured within the CO_2 separator before it is sent for use or storage. According to Theo et al. (2016), received

hydrogen is transported to gas turbine as fuel. Madesjski et al. (2022) emphasized that pre-combustion methods are quite effective in separating CO_2 provided that it is highly concentrated in fuel prior to combustion. Despite its effectiveness, pre-combustion methods are costly because of the gasification unit.

Furthermore, pre-combustion carbon capture uses chemical and physical methods for capturing carbon dioxide from processed syngas. Chemical absorbents, including physical solvents and carbonates, like methanol and polypropylene glycol are commercially deployed in industries for CO_2 capture. Carbon capture's energy consumption and cost expenditure rely on the capture process and utilities. While an effective absorbent/solvent pre-combustion CCS technology can attain more than 90% capture, it, however, reduces plant efficiency (Olabi et al., 2022). The other pre-combustion CO_2 capture method is the calcium looping process which is low cost. An example of the pre-combustion CO_2 capture method is the demo plant found in **Port Arthur, USA**, which has successfully captured one million tons of CO_2 since it commenced operations, without any issues (Madejski et al., 2021). The plant proved that deployment of the *dual pressure swing adsorption* (PSA) technology method can lead to the purification of more than 99.9% hydrogen and high efficiency CO_2 capture.

3.2.2 Oxy-combustion

Instead of being combusted in air, the primary fuel in this process is combusted in oxygen, producing a flue gas containing predominantly water vapor and a high CO_2 concentration (80%). It is also worth noting that the flue gas is then cooled for water vapor condensation, leaving a near-pure CO_2 stream (Madejski et al., 2021). The condensation temperature is often higher compared to ambient conditions, apart from very low partial pressures during the process of condensation. The air separation process generates the oxygen for

combustion, giving oxygen purity of approximately 95%. The **Figure** below demonstrates the general oxy-combustion process.

Figure 10*: Oxy-combustion process*

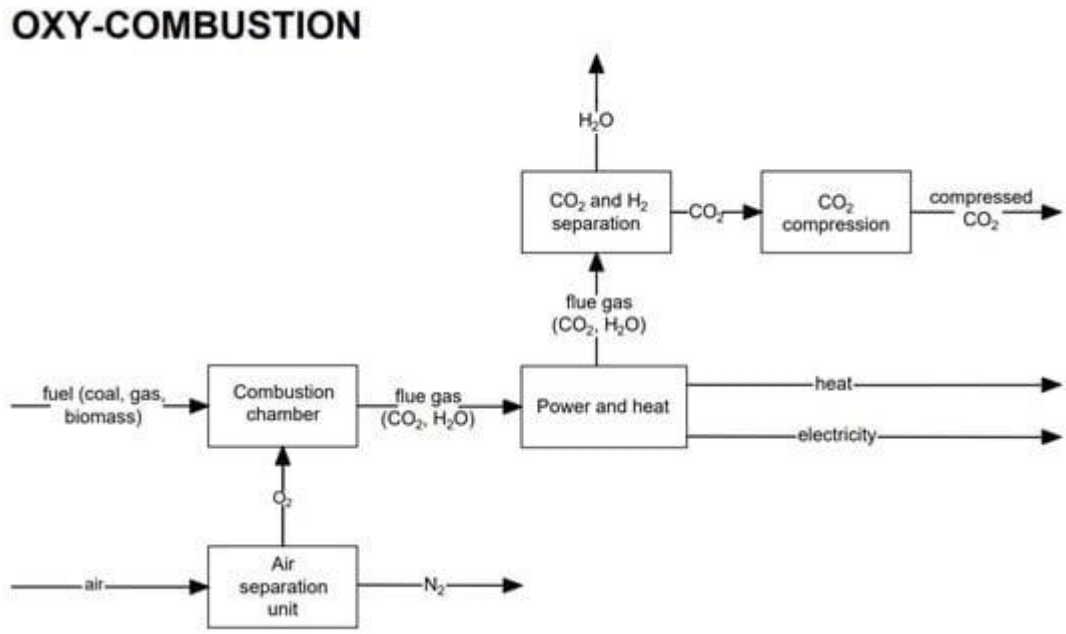

Source: Madejski et al., 2021.

The application of this technology mainly focuses on solid fuel-fired boilers, such as circulating fluidized bed boilers (CFBs) or pulverized coal boilers (PCs) but there is more consideration on the likelihood of using them in gas turbine energy systems. The core strengths of oxy-combustion are simplicity of the method, boiler dimension reductions, exhaust gases' less mass flow rate, probability of using in existing technologies, and nitrogen oxide reduction. However, this method's limitations are low efficiency because of the energy-consuming nature of the oxygen production process, high capital costs, and high material requirements due to the high temperatures. These methods are predominantly utilized for pilot installations and at the lab scale. Specific examples of these are Compostilla Thermal Power and Callide Power Station (Madejski et al., 2021). Compared to other CO_2 capture technologies, the oxy-combustion carbon

capture does not need numerous modifications.

3.2.3 Post-combustion

CO_2 is removed from the flue gas from a fossil fuel's combustion. Ideally, post-combustion separation entails using a solvent to capture CO_2. Typical application for post-combustion technology, include natural gas combined cycle plants (NGCC) and pulverized coal (PC) plants. It is more suited to retrofit applications. In the current conventional power units, post-combustion technologies are the most popular. However, the main barrier to their use is that since CO_2's partial pressure within the flue gas is low, CO_2's driving force is also low.

***Figure 11**: Post-combustion*

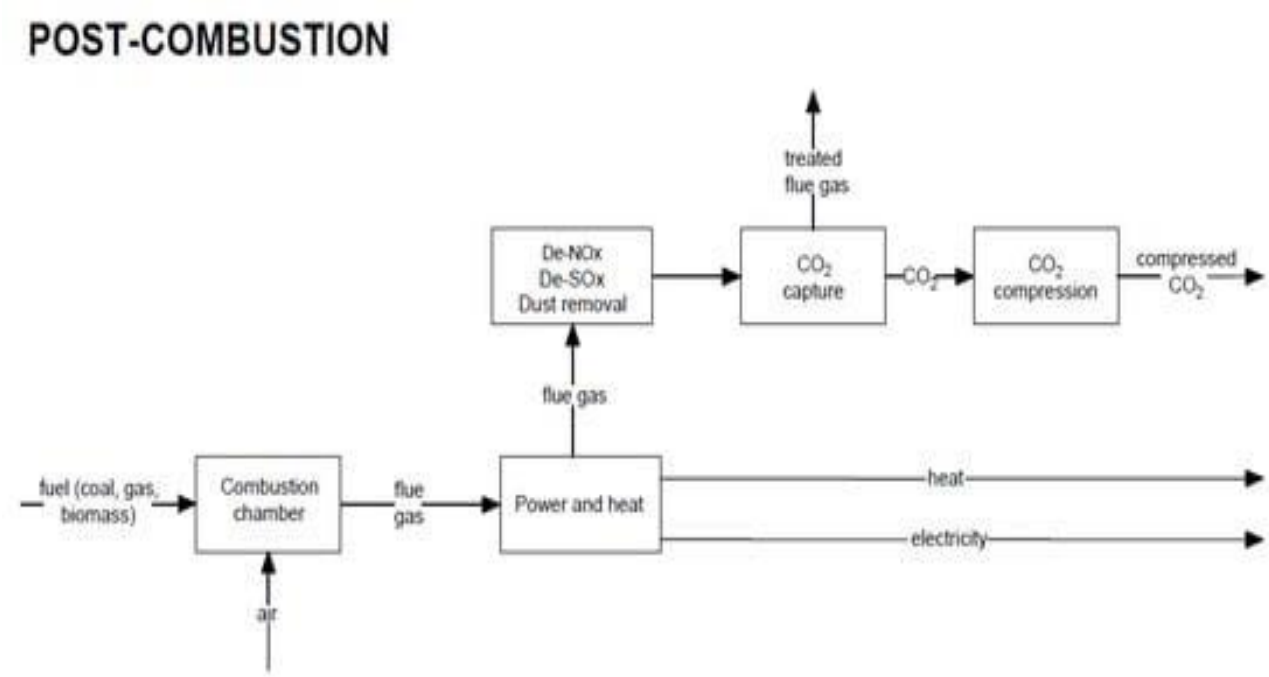

Source: Madejski et al. (2022).

Post-combustion technologies can be divided up according to the type of process used for capturing carbon dioxide, as follows: absorption solvent-based, adsorption-physical separation, membrane separation, and the cryogenic method. These methods form the bulk of this chapter

together with hydration and will be further explained in subsequent subsections to understand their technological aspects, how they work, their advantages and disadvantages, and the effectiveness of each method with regards to the mixed gas streams they are dealing with, as highlighted in the Figure below.

***Figure 12**: CO2 Capture Methods and Techniques*

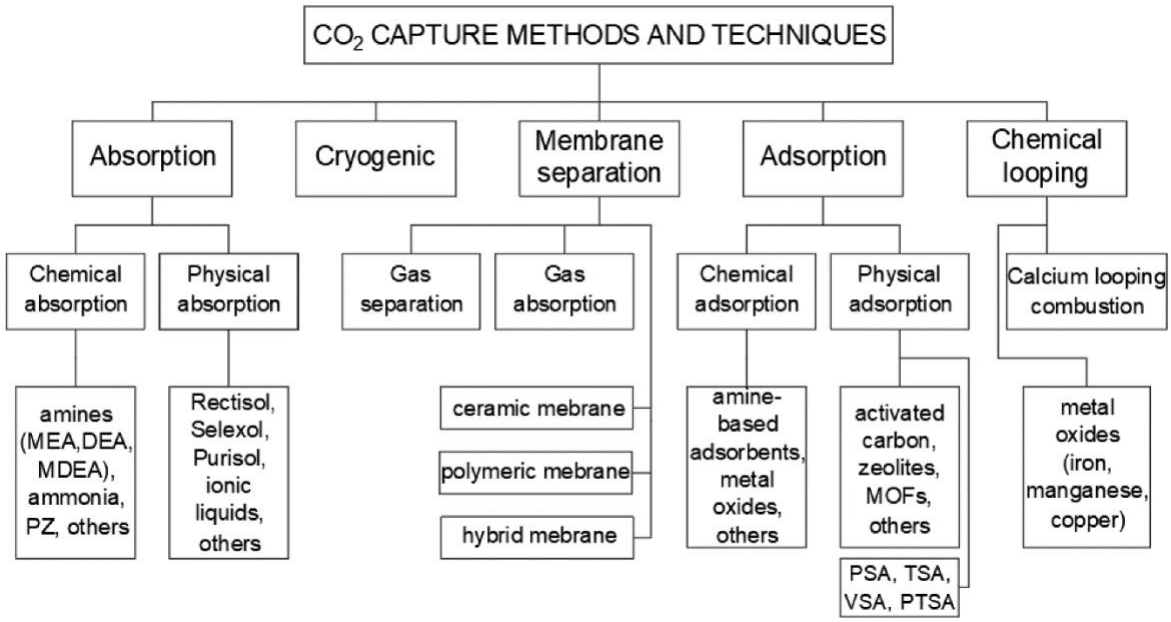

Source: Madejski et al. (2021).

3.3 Absorption

As the most recognizable CO_2 capture method, chemical absorption is based on a reaction between a chemical solvent and carbon dioxide. CO_2 can be absorbed chemically or physically through contact with the suitable solvent. CO_2's physical absorption is premised on Henry's law and it is only used to low CO_2 concentrations. In contrast, chemical absorption entails CO_2 reacting reversibly by heating solvent to form a weakly bonded intermediate compound. The weak bonds can be easily broken down by heat to regenerate CO_2 and the original solvent (Dragos et al., 1996). Natural gas treatment processes have used chemical absorption for a

number of years. Experts mainly use the alkanolamines, which has become the most common and accepted solvent for acid gas capture, that is, H_2S and CO_2. In addition, the predominantly used chemicals within this category are methydiethanolamine (MDEA), Monoethanolamine (MEA), diglycolamine (DGA), diethanolamine (DEA), triethanolamine (TEA), and diisopropanolamine (DIPA) in aqueous solution. Amine solvents embeds various operational issues, thus making them unsuitable for treating high-CO_2 content gas mixtures. Corrosion is the most crucial one, and amine solvents are non-corrosive. As a matter of fact, one of their common applications today is an anti-corrosive agent. Notwithstanding, the existence of acid gas is dramatically altering this behavior in a manner that corrosion is among the most daunting problems within the amine absorption process (Maddox, 1982). Moreover, a significantly high rate of circulation is needed to capture high concentrations of DEA, MEA, and CO_2, since the most utilized amine solvents, have a 0.5-0.7 and 0.33 mole gas/mole amine, respectively (Jones et al., 1952). Consequently, the amine process' application is constrained to an optimal 20 mol% of acid gas within the mixture (Huesemann, 2003). Despite this low acid gas concentration, one of amine absorption process' limitations is that it suffers from high OPEX and CAPEX. Estimations have demonstrated that using this technology can significantly reduce a modern power plant's thermal efficiency, with about a 16 mol% CO_2 in flue gas, from about 45%-35% (MacDowell et al., 2010). More studies are examining the amine solution process to address this weakness (Desideri, 2010), meaning that there is currently no solution available for extremely high CO_2 content natural gas. Power plants using solid fuel use chemical absorption technologies, and they are the only commercially available options. Madejski et al. (2022) contend that the amine method can capture about 85 to 95% of CO_2 in flue gas with more than 99.95% purity.

Figure 13 below demonstrates a chemical absorption's schematic diagram. The process occurs in two phases. During the first phase, reaction between the flue gas and the solvent within the absorber helps to capture CO_2. Next, the rich loading solution is transported to the stripper in order to regenerate CO_2 at higher temperatures. The lean-loading solution or the solution without CO_2 is returned to the absorber column followed by the transportation of a high purity CO_2 stream from the desorber for storage or use and compression.

***Figure 13**: Chemical Absorption schematic diagram*

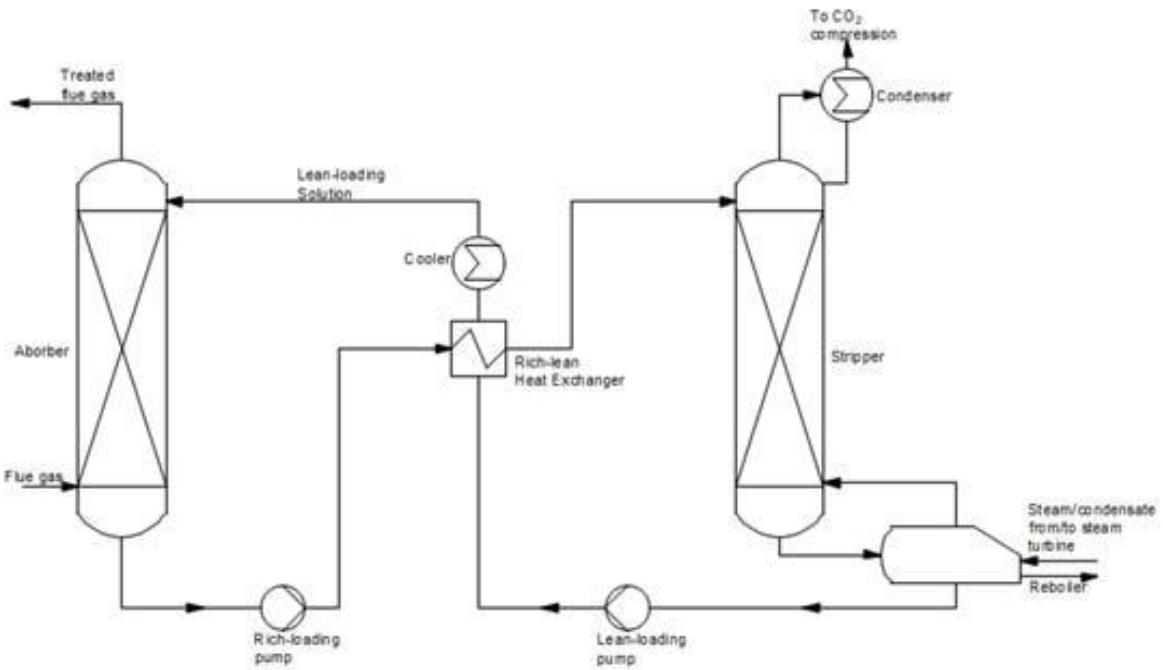

Source: Wang et al., 2017.

In the chemical industry, the chemical absorption process has been utilized for a long period. The normally used 30% MDEA and MEA solutions have a high level of CO_2 purity and a high process efficiency (Du et al., 2010). However, one of its limitations is that the process consumes a lot of energy because large heat amounts should be channeled to the desorber. The general assumption is that 30% of the heat supplied to the stream within the boiler needs to be directed to the CCS installation.

Besides conventional solvents (i.e., piperazine, amine-based-MEA, ammonia, DEA), other solvents have been developed for the process of CO_2 capture. It is worth noting that solvent mixtures provide the ability to enhance absorption properties through appropriate combination of types. While tertiary amines are characterized by a high capacity, secondary and primary amines have high rates of absorption (Nord & Bolland, 2020). For instance, mixing MEA with some PZ can enhance the rate of absorption because PZ is about 50 times faster (Vega et al., 2018). The other probability is using a solution of 2-amino-2-methyl1-propanol (AMP) with PZ. For example, mixing 5 wt% PZ and 25 wt% AMP has been found to be an idea alternative for MEA (Artanto et al. 2014). The other novel amine alternatives are ironic liquids (ILs), which are low melting salts consisting of an arbitrary anion and large cation that can be mixed freely to obtain various compound properties. Depending on pressure, ILs can chemically or physically absorb CO_2 (Nord & Bolland, 2020). To reduce energy consumption, biphasic solvents and water-free solvents have been proposed as new generation solvents. Water's presence within a solvent improves the energy demand for the process of regeneration. Researchers have established that novel water-free solvents, including non-aqueous organic amine mixtures, particularly ethylene glycol can attain up to 95% CO_2 capture efficiencies (Barzagli et al., 2014).

3.3 Adsorption

From an industrial perspective, adsorption is an important phenomenon that entails various chemical engineering aspects. It can be categorized into size exclusion, physisorption, and chemisorption. Chemisorption occurs in catalytic processes, including Fischer–Tropsch synthesis (Zennaro, Tagliabue, & Bartholomew, 2000). On the other hand, physisorption is reversible adsorption on a material's surface. The most renowned physisorption adsorption is silica gel dehydration (Campbell et al., 1983). The target molecules in size exclusion fit into the

absorbent's pores, and the rest passes by. An example of this category is O_2, N_2, or CO_2 capturing. The process is almost similar in the size exclusion and physisorption categories. Physical separation depends on cryogenic, absorption, and adsorption separation methods. Adsorption deploys a solid surface for getting rid of CO_2 from a mixture. It can be physical (e.g physisorption) or chemical (e.g. chemisorption). Various porous materials, including zeolites, alumina, activated carbon, or metallic oxides) are used in physical adsorption to absorb CO_2 (Energy Technology Perspectives, 2020). Activated carbon is a low-cost material containing amorphous carbon. A key strength is that it has a large surface area and offers the possibility to modify its pore structure. In contrast, the weak bond energy with CO_2 makes the material to be quite microporous to aid in carbon capture (Nord & Bolland, 2020). While zeolites or crystalline aluminosilicates have excellent adsorption properties for carbon capture, they are hydrophilic. Water weakens these properties by minimizing the interactions between coupled compounds (Boot-Handford et al., 2014), leading to the use of a new approach called metal-organic frameworks (MOFs) within adsorption processes. MOFs are made up of ion clusters or metal ions connected by bridges and organic ligands that lead to strong coordination bonds. Thus, MOFs have benefits such as a high porosity, ease of synthesis and design, and tailored pore properties (Darman & Harun, 2006). Silica is one of the other adsorption materials; they are non-carbonaceous substances with a large pore size and surface area – and are highly mechanically stable. Amine-based substances are used by mesoporous silica materials for CO_2 capture (Nord & Bolland, 2020, Osman et al., 2021).

The adsorption methods are pressure–temperature swing adsorption (PTSA), pressure swing adsorption (PSA), and the vacuum swing adsorption (VSA). PSA is the most studied and practiced process for CO_2 capture from the flue gas (Yong et al., 2002). Since the adsorption

occurs in an absorbent's fixed bed column, more than two parallel columns are needed in the PSA process for the continuous process. As one column captures the gas, the second should regenerate. The major parameter in the adsorption process is the absorbent's selection. The absorbent should have good mechanical stability, particularly resistance against corrosion and erosion, proper selectivity, high adsorption capacity, enough adsorption/desorption kinetics, and stable lifetime capacity (Yong et al., 2002). One of the benefits of adsorption technology is the ability to capture H_2S and CO_2 together and deter this corrosive and poisoning gasses from getting into the atmosphere/process. Also, the capturing capacity is higher while the heating is lesser compared to the absorption process. Notwithstanding, this process has a number of drawbacks. For example, the produced carbon dioxide has low pressure, meaning that it needs compression duty. Moreover, managing heat in a solid material is quite difficult. At the same time, sorbent materials degrade after a few cycles, which can lower the capacity. Besides these limitations, capturing carbon dioxide as high as 70% within a mixture needs too many absorbents as well as parallel product lines. In this regard, using adsorption for high CO_2-content gases needs high OPEX and CAPEX.

3.4 Membranes

Membrane usage existed long before humans commenced understanding and utilizing the concept. From peel to cell walls, membranes control materials' transfer. In the industry, water desalination in the reverse osmosis process was the membrane's first usage (Rehman & Lal, 2022). Using the difference in gas permeation through a dense and homogeneous membrane facilitates the separation of CO_2 from other gases. A gas' permeability is premised on its solubility within and diffusion through the membrane. Currently, semipermeable membranes are used for the removal of CO_2 from natural gas. Because the membrane separation does not need

any chemicals, this is deemed a cleaner process from an environmental perspective.

The two forms of membrane capture technology are absorption membranes and gas separation membranes. For the gas separation membrane, gas with carbon dioxide is introduced at the membrane's high-pressure side. CO_2 recovery occurs at the low-pressure side. Within the gas absorption system, a solid microporous membrane is used for enabling absorption and gas flow. This system has a high rate of CO_2 removal, based on minimization of flooding, entrainment, channeling, and foaming. Figure 14 shows both membrane systems' principles.

Figure 14: *Gas separation and Absorption membranes*

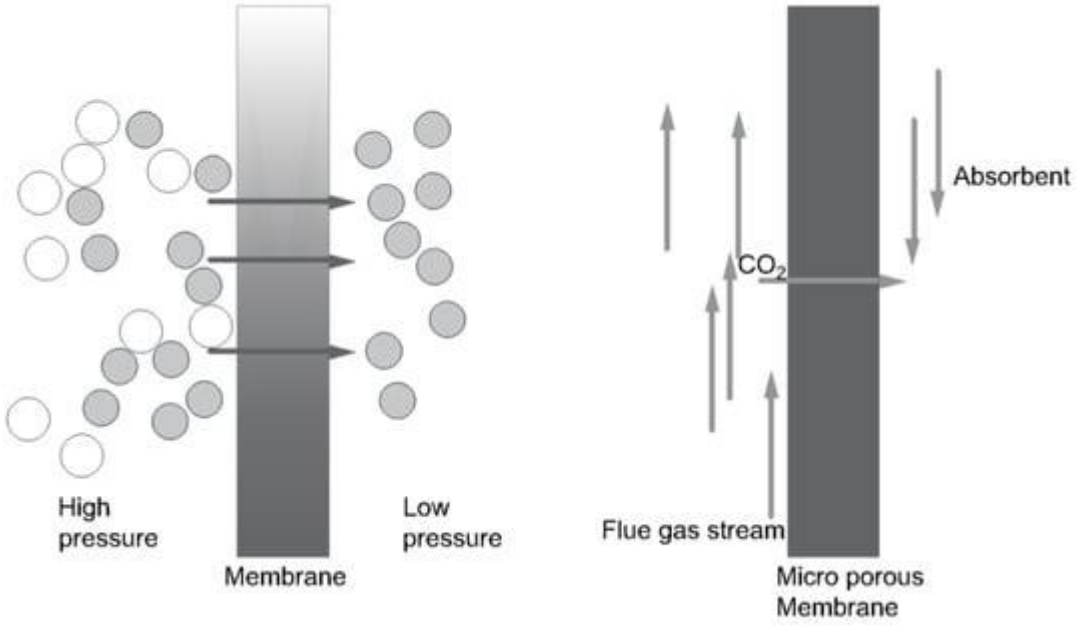

Source: Based on Sifat & Haseli, 2019.

Figure 15 illustrates the process of membrane separation. The flue gas is directed to an absorber in order to cool the membrane's operating temperature. Flue gas is subsequently transported to the membrane using hollow fiber modules, spiral wound, and flat sheet (Sifat & Haseli, 2019).

Figure 15*: Membrane separation process*

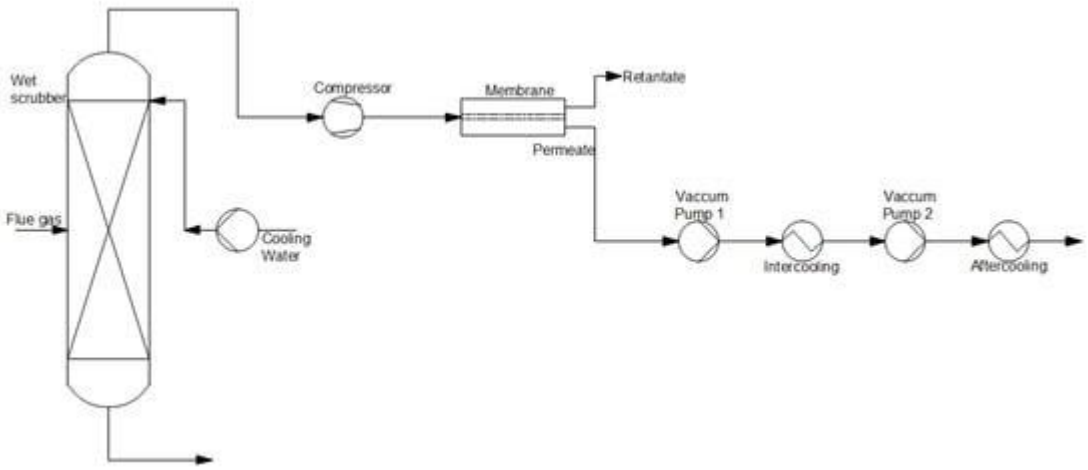

Source: Based on Wang et al. (2017).

Membranes should have relevant gas separation properties: selectivity and proper permeability. The three types of membrane materials are hybrid membranes, polymeric or organic membranes, and ceramic or inorganic membranes (Wang et al., 2017). The polymeric membrane has a lower production cost compared with the others with a comparatively high gas flux and has mechanical stability (Pires et al., 2011). Notwithstanding, it has low selectivity CO_2/N_2—less than 100, instead of the recommended 200 (Li et al., 2011). On the other hand, ceramic membranes, particularly zeolites and their derivatives, get high selectivities, but their production is more difficult. Modified on inorganic membranes' surface, hybrid membranes offer advantages of both ceramic and polymeric membranes. Their advantages are an inorganic material's high selectivity, a polymer's low production cost, and flexibility.

Table 2*: Summary Table of Advantages and Disadvantages of Common Carbon Capture Technologies*

Carbon capture method	Pros	Cons	References
Absorption	-At least 70 years of experience Recovery of CO2 does not need heat to reverse chemical reaction -Fast kinetics -Easy to manage heat -Combined CO2/H2S removal -Wet scrubbing allows good heat integration -Best work with low CO2 partial pressure	-Significant amount of energy (in the form of heat) required for regeneration. -Energy required to heat, cool, and pump nonreactive carrier liquid (usually water) is often significant. -Low capacity requires circulating large volumes of solvent, resulting in large pump loads. -Produced CO2 pressure is low. -Unsuitable for high CO2 partial pressure.	Aghel et al., 2022; Chang et al., 2022; Gouerdard et al., 2012; Granite & O'Brien, 2005; Vora et al., 2013; Zhao et al., 2012.
Adsorption	-Best work with low CO2 partial pressure -CO2 recovery mainly premised on the pressure swing -Ability to combine H2S and CO2 capture -Fast kinetics -Large capacities	-Produced CO2 pressure is low. -Heat management in solid systems is difficult. -Produced large pressure drop. -Heat required to reverse chemical reaction. -Sorbent attrition. -Unsuitable for high CO2 partial pressure.	Aghel et al., 2022; Kaur et al., 2019; Raganati et al., 2020; Sigelman et al., 2019
Membrane	-No steam load or chemical attrition. -Clean process. -Low maintenance cost. -Compact design. -Can deliver CO2 at high pressure.	-High capital & operational cost. -Membranes may not keep out all unwanted contaminants. -Tradeoff between recovery rate & product purity. -Requires high selectivity. -Requires good pre-treatment. -Bad economy of scale.	Chang et al., 2022; Han & Ho, 2018; Kárászová et al., 2020; Madejski et al., 2022
Cryogenic distillation	-Produced highly pure CO2. -Favorable for high CO2 content mixtures	-Large cooling duty. -High operational cost. -Unsuitable for small/medium scale applications.	Bi & Ju, 2022; Naquash et al., 2022; Shen et al., 2022.

Source: Rehman & Lal, 2022

3.5 Hydrates

Since the discovery of gas hydrates, various equipment have been developed by scientists to study them. Gas hydrate or clathrate hydrate is defined by Rehman and Lal (2022) as a crystalline compound that is made of water molecules taking the hydrogen-bonded cage shape and entrapped liquid/gas molecules within those cages. Gas hydrates develop under high pressure and low temperatures. Through hydrogen bonding, the guest (gas) molecules are encapsulated by the H_2O molecules. Currently, the three famous structures are sI, sII, and sH. In maintenance of cavity expansion, guest repulsion is considered more important than attraction since cavities are extended compared to ice and guest molecules deters them from collapsing (Roger, 1990). The guest's size remarkably impacts the occupancy of the hydrate structure and hydrate activities in both structures I and II. In addition, a guest molecule's shape and size are both significant in structure H. The size ratio to the cavity helps to estimate cage occupancy and crystal structures. Consequently, the crystal structure help to determine the hydrate phase's temperatures and equilibrium pressures.

During recent times, gas hydrated has become a popular CO_2 capture medium, mainly from flue gas as a post-combustion carbon capturing scenario. Hydrates are attracting attention because of their lower energy requirement than conventional capturing technology. In addition, this technology utilizes water as the major chemical with a small additive portion as a promoter (Almashwali et al., 2022). Thus, it is perceived to be a less environmentally harmful process. In any capturing method, selectivity is considered the most crucial parameter. CO_2 has an appropriate size to form stable gas hydrate at a 2-6 MPa pressure, whereas N_2 is not large enough to stabilize hydrate structure at such a pressure range. In this regard, CO_2 has a higher likelihood of forming gas hydrate at moderate pressures than N_2. While the tendency of methane and carbon

dioxide to form hydrate is similar, carbon dioxide has a higher likelihood to form hydrate at lower pressures than methane. Under controlled conditions, it is also possible to separate CO_2 from CH_4 (Khan et al., 2018).

Hydrate-based processes, however, have a few limitations in industrial applications as a capturing technology. Since hydrate formation is predominantly a crystallization process, any other crystallization process needs super saturation conditions, time, and enough contact area. At the same time, since hydrate formation is largely an exothermic process, higher rate of hydrate formation leads to a rise in heat generation, and subsequent rise of the reactor temperature. Besides, since the process is thermodynamically-driven, increasing the temperature can change the condition from one preferred by a hydrate to one preferred by a non-hydrate (93). Methane and carbon dioxide molecules share the same properties for hydrate development, and separation using the hydrate process becomes even more challenging. In this regard, studies have recommended the need for research to focus on selecting additives to improve the separation efficiency.

Usually, bubble columns, spray towers, and stirrer tank are utilized for gas hydrate crystallizers in both kinetic and thermodynamics studies. Besides, rocking cells are utilized for thermodynamic studies and the flow loops simulate the pipeline condition (Jerbi et al., 2010). Furthermore, a few unique crystallizers exist, with patents protecting many of them. It is important to understand the reactors and analyzes the advantages and disadvantages of using them.

According to Partoon and Javanmardi (2013), the stirrer-tank reactor (STR) is a commonly used equipment in gas hydrate lab-scale installations. Its ease of use makes it suitable for closed-system, low-throughput batch applications. The stirrer plays a crucial role in

combining/agitating the liquid and gas phases. It is not advisable for large-scale hydrate production in stirred-tank reactors because of the high likelihood to encounter technical difficulties during manufacture, scale-up, and operation. The first critical limitation associated with STR is the stirrer (Mori, 2003). A rise in the hydrate phases' volume fraction would lead to a subsequent increase in the effective speed of the gas hydrate slurry, especially in semi-batch or batch processes. Thus, there is a need for enough and varying from the stirrer shaft in the whole hydrate formation process. While hydrogen hydrates can only develop when the liquid and gas phases are mixed, rapid mixing can destroy the nucleation process. After full formation of the hydrate, the slurry will be quite viscous, mandating more mixing force. Additionally, because the hydrate reactor should be run under high pressure, appropriately sealing the stirrer shaft is a difficult task. This is feasible from a technical point of view, but would lead to a significant increase in the reactor's price. Existing stirrer-tank configurations usually use magnetic stirrers instead of impellers to address the sealing problem under pressure. Figure 14 below shows these two laboratory-scale stirrers-tank reactor designs. However, when the slurry's viscosity rises, a magnetic stirrer cannot deliver enough thrust and will jam.

Figure 16*: Lab-scale stirrer-tank reactors. (a) Impeller & external motor. (b) Magnet bar & magnet stirrer.*

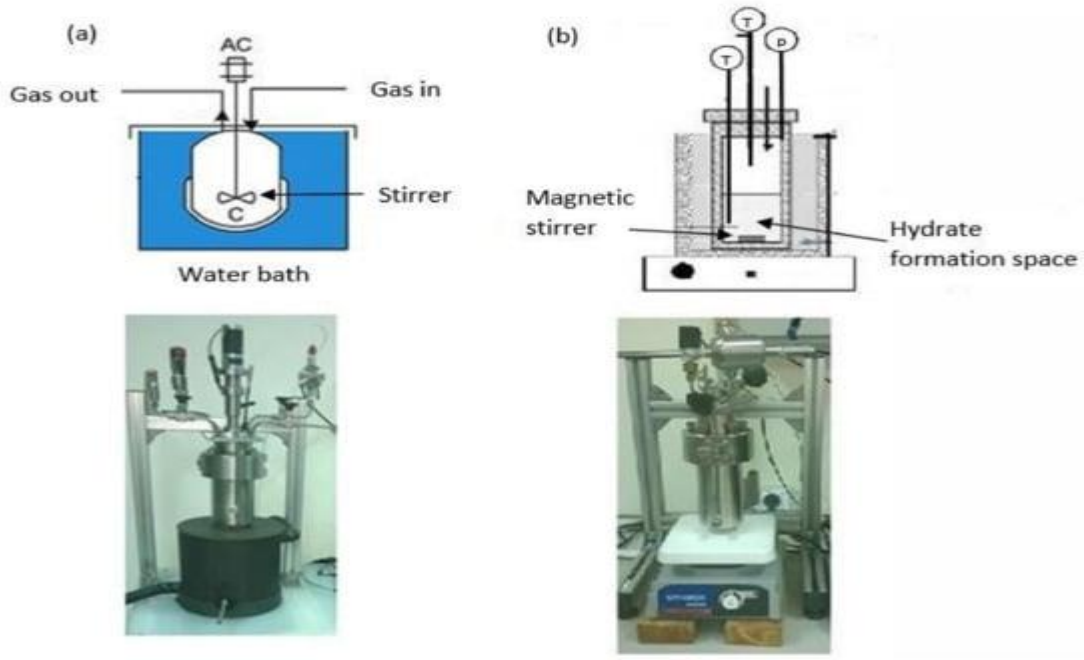

Source: Rehman & Lal, 2022.

In Figure 15, Linga et al. (2010) use a stirrer-tank reactor fitted with an impeller designed in a manner in which gas gets induced from the impeller.

Figure 17*: Linga et al.'s gas-inducing reactor*

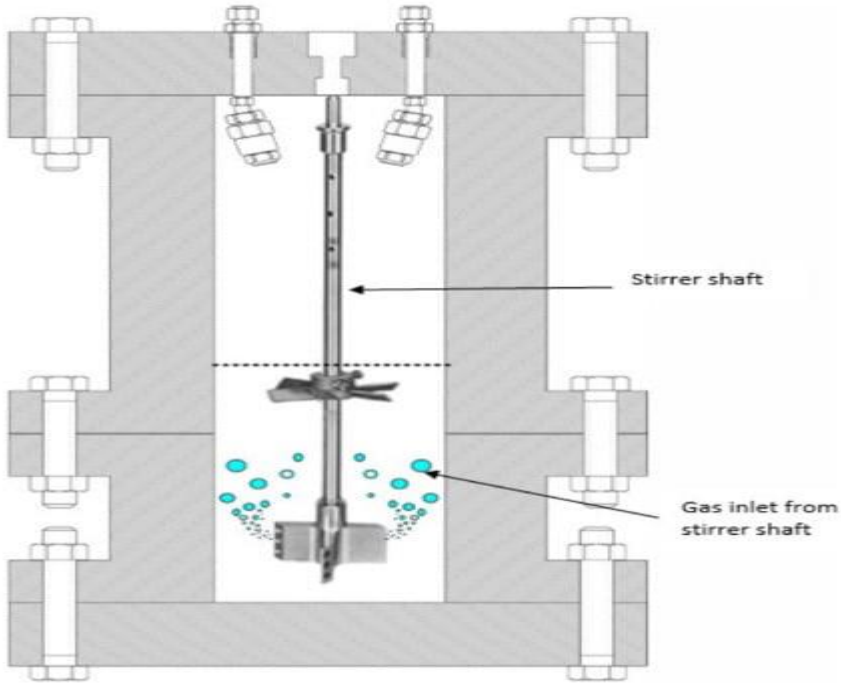

Source: Linga et al., 2010.

In this regard, the crystallizer can increase the liquid and gas phases' agitation and minimize the hydrate crystals' agglomeration at the interface. This impeller circulates the gas within the liquid phase internally.

For the bubble reactors, the main stage in bubble column reactors is liquid water. Thus, a steady thermal profile can be given in this form of reactor, and he hydrate formation heat can be removed from the reactor walls in a more efficient way. Additionally, the water phase's motion of bubbles will disturb the system. Notwithstanding, providing tiny bubbles that are uniform in size in the entire cross-section and column length is difficult. As a result, without a stirrer system (that has its own issues), continuous gas hydrate is not possible in bubble columns.

The table below shows a comparison of the pros and cons of the common reactors deployed in hydrates.

Table 3: Pros and cons of Common hydrate reactors

Type of Reactor	**Strengths**	**Limitations**
Stirred-tank reactors	-Well-established design -simple operation -suitable for lab-scale	-Difficult scaling up -high torque power for mixer -high risk of leakage -high fabrication cost
Bubble column	-effective heat removal -can convert all water to hydrate -ability for internal cooling -mass and heat transfer can increase by adding mixer	-needs high-pressure compatible compressor to recycle any extra gas -issues with using stirrer to bring up the stirrer tank
Spray tower	-no need for mechanical stirrer -can get rid of induction time -easy scaling up -fast hydrate formation of a large contact area	-Hydrate slurry is inevitable -non-effective heat removal

Source: Rehman & Lal, 2022.

4.0 ECONOMICS ON CARBON CAPTURE TECHNOLOGIES

4.1 Absorption

The cost-competitiveness of absorption, adsorption, and membrane-based CO_2 capture is determined by the separation requirements and plant scale, as well as the specific technology chosen, meaning the membrane material, liquid sorbent, and solid adsorbent. While a number of technoeconomic studies have been conducted to investigate these processes separately or some compared them with reference to a particular application, there are scarce broader comparative assessments of the three technologies within the literature (Zanco et al., 2021).

The cost analysis for the membranes, absorption, and adsorption is based on the Total Annualized Cost (TAC) per unit mass of CO_2 captured, which is mainly defined as

$$\mathrm{TAC} = \mathrm{AIC} + \mathrm{AOC}$$

(7)

where AOC and AIC and AOC are the and Annual Operating Costs and Annualized Investment Costs, respectively (Hasan et al., 2012). AIC includes all costs that relate to the utilities needed for process operation (predominantly the energy supplies), while the former is the summation of the initial cost of purchasing the plant, whose capital investment is a product of the annualization and maintenance cost, as illustrated in the formula below:

$$\mathrm{AIC} = \phi \mathrm{TPC} + \mathrm{AMC}$$

(8)

with AMC representing the annual maintenance cost and TPC being the total plant cost, and ϕ being the capital recovery factor, relating to the discount rate i and the number of annuities

received *n* (equal to the plant lifetime) and is calculated as

$$\phi = \frac{i(i+1)^n}{(1+i)^n - 1}$$

To make it simpler, this study makes the assumption that utility prices are 0.0625 € per kWh of electricity and utility prices of 5.36 € per ton of steam and, consistent with the values adopted by Hasan et al. (2012) and by Tsay et al. (2019).

For the three technologies (absorption, adsorption, and membranes), I analyze the estimated costs and their breakdowns for each technology. I acknowledge that the approach I adopt in this work comprises a high-level cost analysis. While there is a need for a rigorous economic model of these three technologies to get accurate cost estimates, this study holds the opinion that the methodologies deployed can be effective for determining general economic trends.

Back to absorption, to determine the investment costs related to installation, purchase, and maintenance of the equipment, this study has taken into account all elements incorporated within the layout as shown in Figure 18 below. The shadowed regions in the desorption and absorption columns illustrate various packing sections.

Figure 18*: A solvent-based CO_2 capture process' Flow diagram*

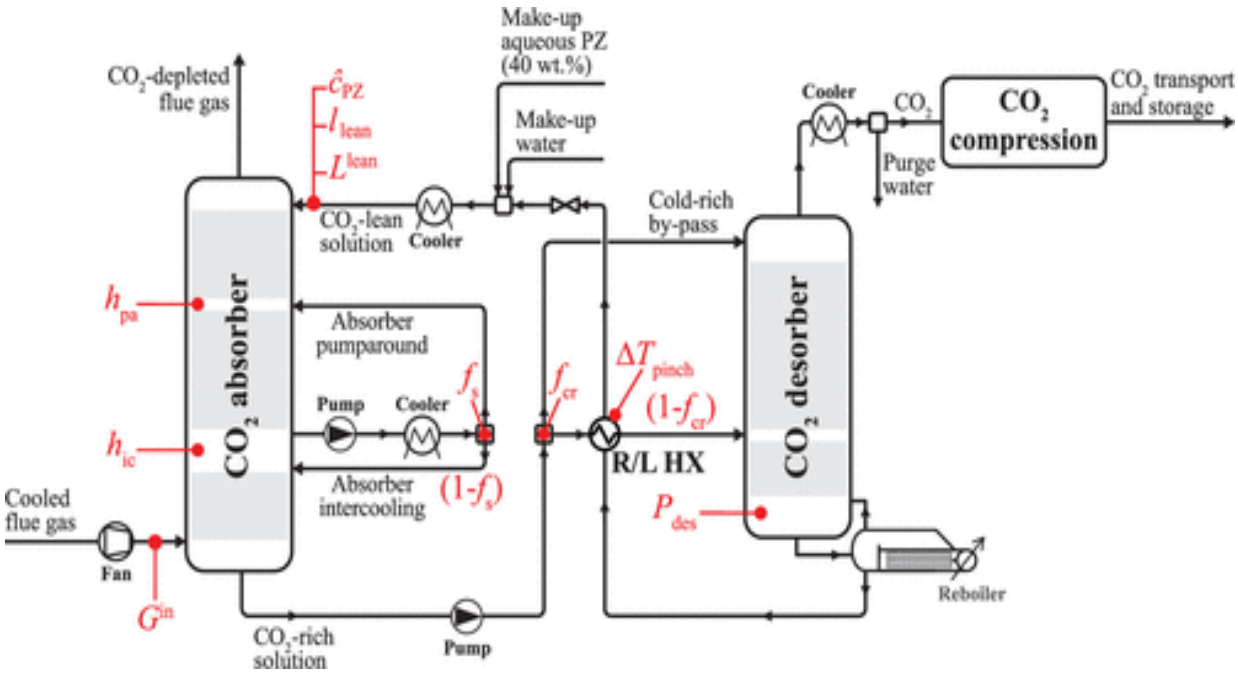

Source: Zanco et al. (2021).

This study also considers a three-meter-high packing section on top of the carbon dioxide absorber as a flue gas water-wash (FG-WW) column. This has been found to reduce the PZ-concentration within the carbon dioxide-depleted flue gas concentration below one ppm (Rochelle et al., 2019). In addition, the FG-WW column can get rid of the amine degradation products from the carbon dioxide-depleted flue gas before the stack. To make it simple, such degradation components have been excluded in this study.

Figure 19 illustrates that cost of carbon dioxide captured for a solvent-based capture process utilizing aqueous PZ as absorbent for the technical optima shown in Figure 20 at various carbon dioxide recovery rates.

***Figure 19**: Absorption: TAC/unit CO_2 captured*

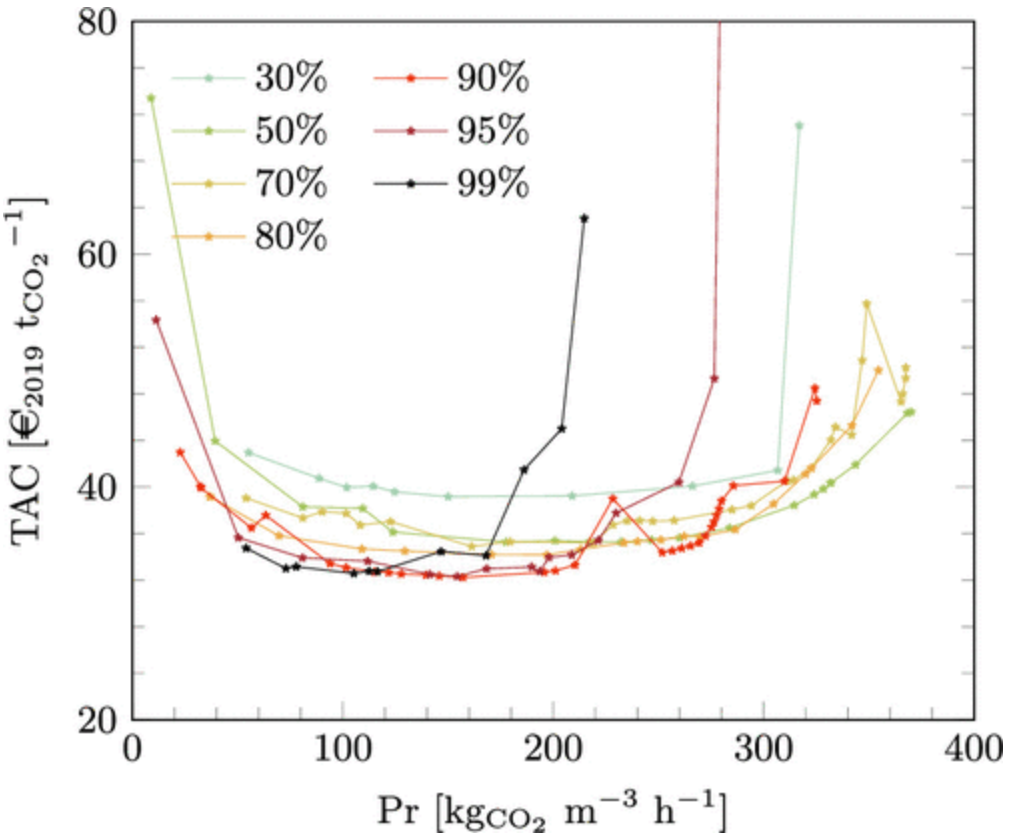

Source: Zanco et al. (2021).

These results are for a 5000 tons/day plant size of processed flue gas. At every carbon dioxide recovery value, the TAC curve has a comparatively flat section within the middle, covering various productivity values and demonstrates a minimum around midrange. The costs rise significantly at extremely low and quite high productivity. At the Pareto front's left end, low productivity suggests large volumes of equipment, impacting the capital expenditure. In contrast, at the Pareto's right end, the energy demands lead to more cost. Figure 19 clearly shows this cost trend at every recovery rate.

Regarding the curves' relative position, the minimum TAC is achieved for high carbon dioxide recovery values, between 90% and 99%, found at ca. 32 €/ton of carbon dioxide captured for a plant processing 5000 ton of flue gas every day.

Figure 20: *Technical optimization results for absorption using aqueous PZ*
(a) Data points and Pareto front at 90% recovery rate; and (b) Pareto fronts at recovery rates between 10 and 99%.

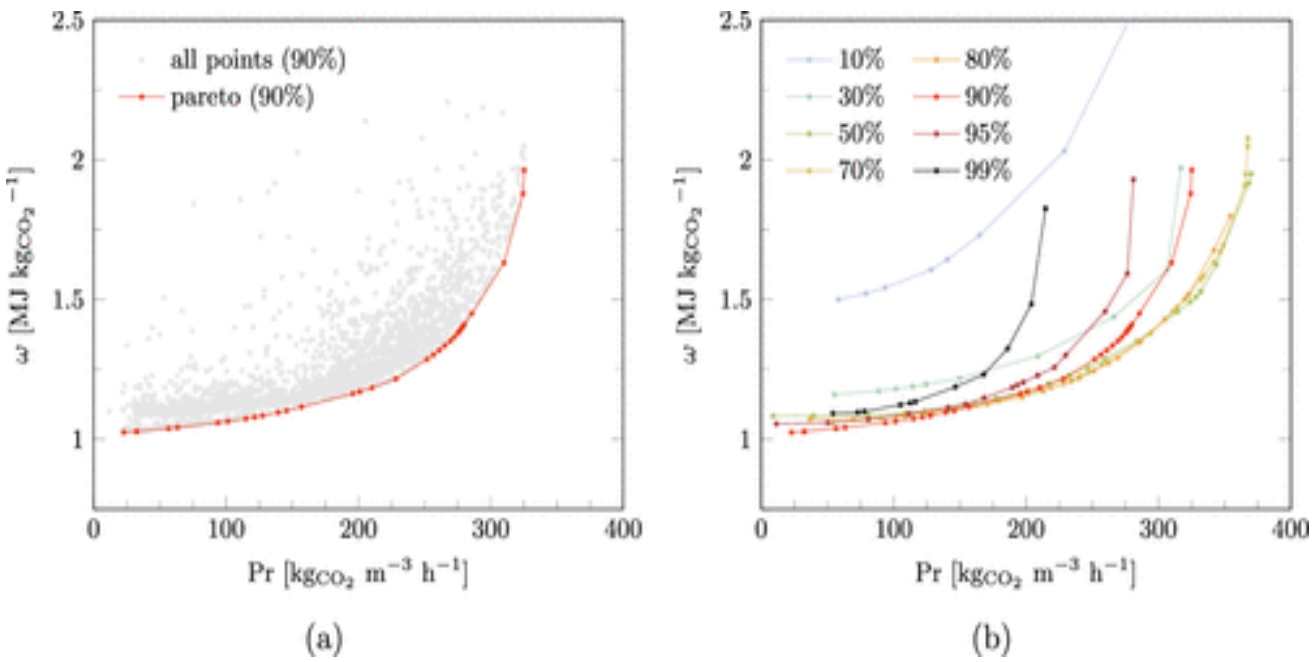

Source: Zanco et al. 2021

Figure 19 illustrates TAC's breakdown in AOC and AIC for the cost curve at 90% carbon dioxide recovery as depicted in Figure 21**a**. At this rate of recovery, and for the plant size considered, the AIC: AOC ratio is estimated to be 43-57% at minimum TAC. In Figure 21, it is worth noting that the term TECH refers to AIC vessels and AOC's makeup flow rates.

Figure 21: *Absorption: Cost breakdown/unit carbon dioxide capture for 90% recovery Pareto front*

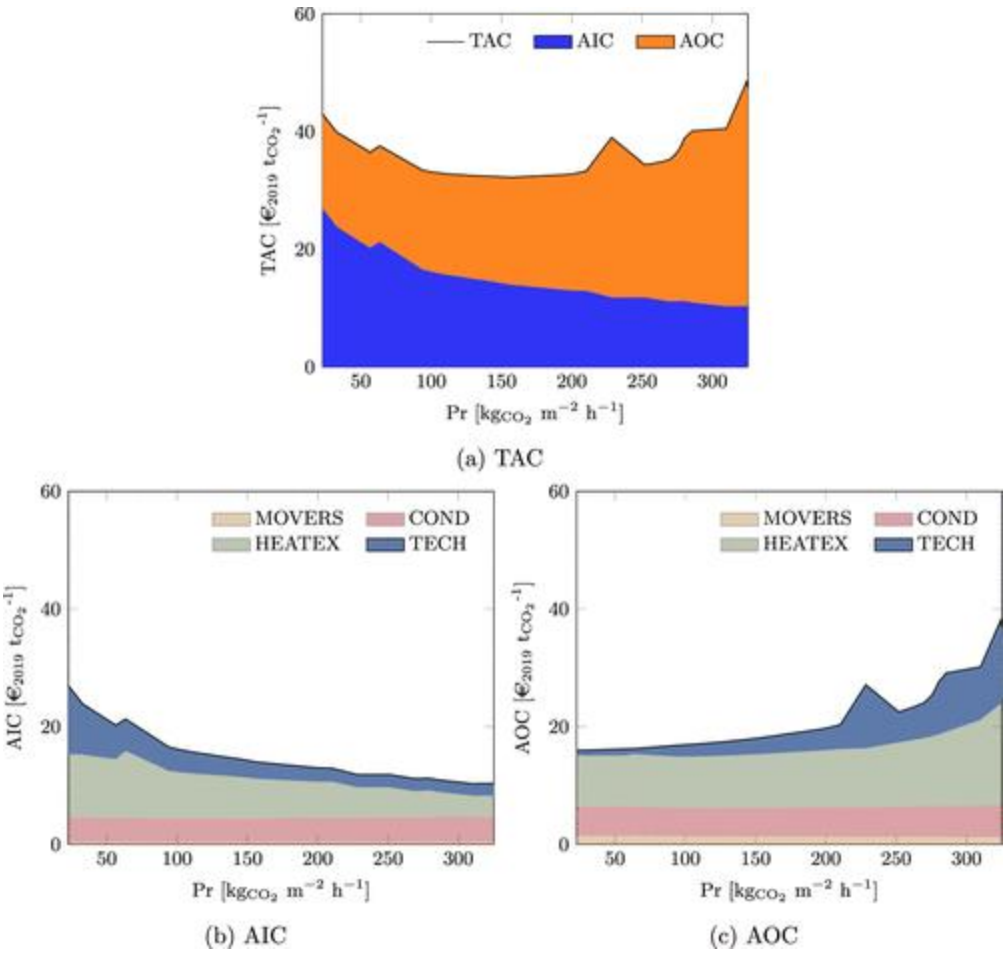

Source: Zanco et al. 2021.

In Figure 21b and c, the corresponding breakdown of costs for both AIC and AOC into the various operation categories are illustrated. For AIC, TECH refers to the FG-WW column, the carbon dioxide absorber, and desorber. On the other hand, AOC includes the aqueous PZ solution's rate and that of water needed within the carbon dioxide capture section, along with the FG-WW column's water makeup, with the assumption that the liquid: gas flow rate ratio is 0.3 kg kg^{-1} (Gardarsdottir et al. 2019). As shown in Figure 21b, AIC decreases with increasing productivity as a result of the absorber and the R/L HX's volume reducing, as the process' technical optimization obtained highlighted in Figure 22b, which are the predominant contributors to the TECH and HEATEX components.

***Figure 22**: (a) Exergy consumption breakdown considering HEATEX; (MOVERS) & LIQUEF. (b) Inverse of productivity breakdown considering the absorber packing's volume, the desorber packing, & the R/L HX.*

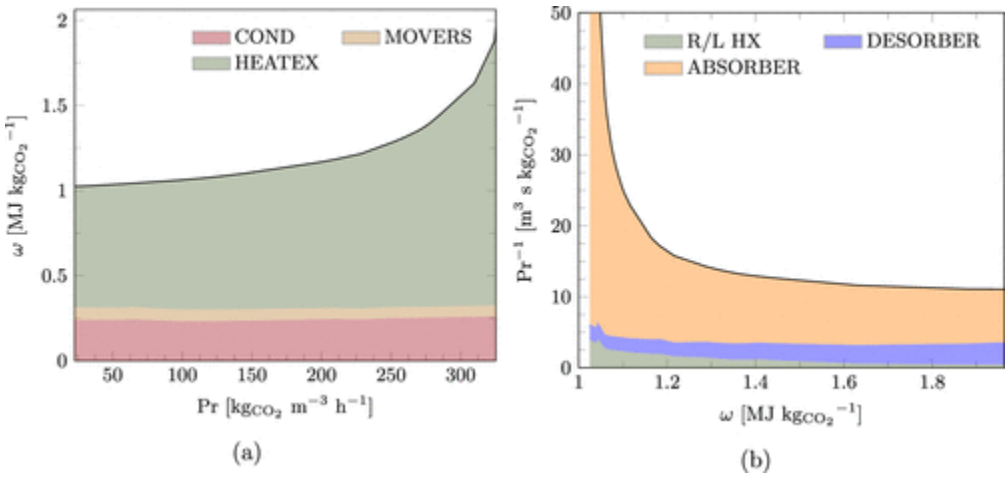

Source: Zanco et al. 2021.

Figure 21c demonstrates that AOC increases productivity as a result of the increase of energy within the reboiler of the carbon dioxide desorber for solvent regeneration and PZ solvent losses (major contributor to AOC's TECH term). The AOC curve's slope related to the thermal energy needed for solvent regeneration for enhancing productivity is less steep than the technical optimization case, particularly at low productivity values as indicated in Figure 22a. This is due to the fact that AOC computations only factor in the quantity of steam needed, but due to simplicity, they do not consider the temperature of the steam required.

In contrast, the exergy computations done in the process' technical optimization factor in both the steam amount needed and its temperature. The rise of costs related to the solvent makeup with rising productivity values is attributed to the larger reboiler temperature and duty, resulting in higher temperatures at the top of the desorber (Zanco et al., 2021), hence to larger PZ concentrations within the exiting carbon-dioxide rich stream. In spite of the fact that the solvent make up has been excluded in the process' technical optimization and exclusion of the solvent

recovery section in the process simulation, the solvent's cost at maximum operating conditions obtained by Zanco et al. (2021), that is, ca. 2–3 €/ton of carbon dioxide captured, is in tandem with the cost of solvent reclaiming and makeup as various studies have reported (Sexton et al., 2014), hence supporting the simplification's validity.

Figure 23 demonstrates the costs within the plane AOC-AIC of suboptimal technical points illustrated in Figure 20a resulting from Zanco et al. (2021)'s two objective technical optimization that met constraints and specifications.

***Figure 23**: Absorption: Curve of AOC vs AIC per ton of CO_2 captured.*

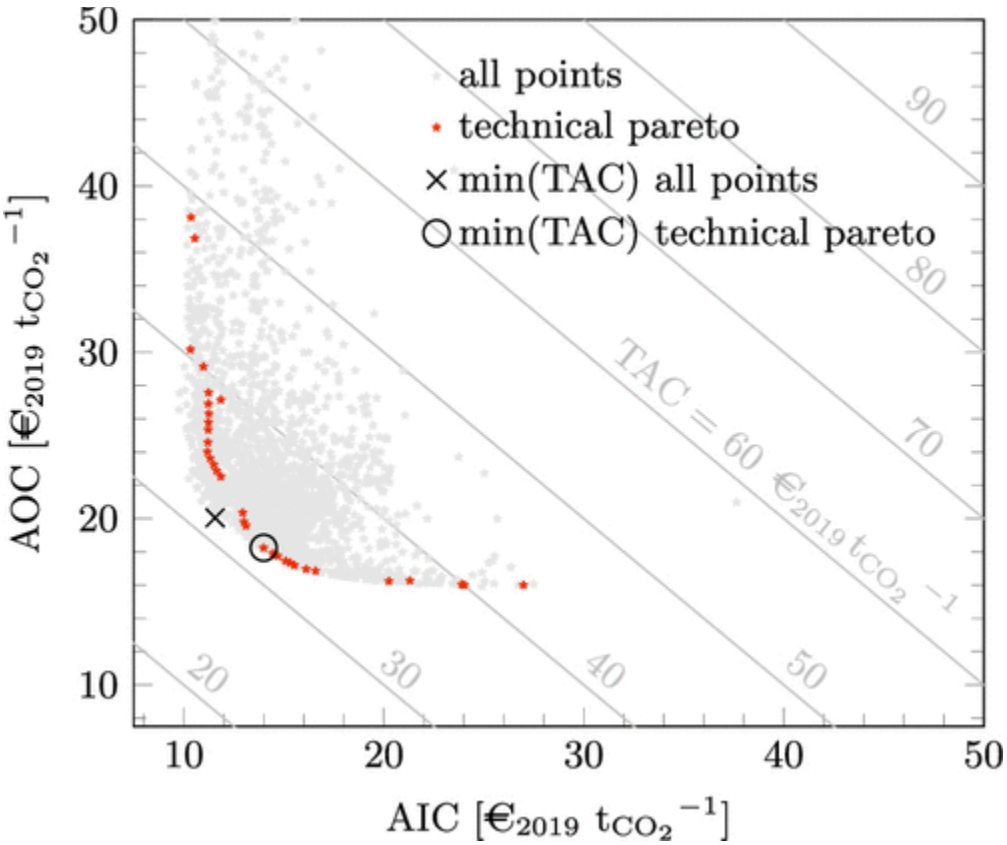

Source: Zanco et al. 2021.

It is worth noting that the cost curves Zanco et al (2021) obtained from the technical Pareto fronts (depicted by the red points in Figure 23) illustrate efficient solution sets in terms of cost.

Productivity and exergy can reproduce the AIC and AOC trends, respectively. Low productivity and low exergy technical Pareto points in Figure 20a result in high AIC and low AOC values in Figure 23, while high productivity and high exergy Pareto points result in low AIC and high AOC values in Figure 23. In addition, the minimum cost solution on the technical Pareto front highlighted by the black circle correlates with the minimum cost on the whole cloud of points, as depicted by the black cross, that is, 32.2 and 31.6 € per ton of CO_2 captured, respectively (Zanco et al., 2021).

Additionally, the capture cost obtained by Zanco et al. (2021) using the two steps-approach (two-objective technical optimization and cost calculations) resonates with findings obtained from single-objective optimizations based on cost reported in studies for absorption-based carbon dioxide capture process premised on the aqueous PZ solvent. Zanco et al. (2021) obtained a cost of carbon dioxide capture of 23.4 €/ton of CO_2 captured for 90% CO_2 capture efficiency. This result resonates with Tsay et al.'s (2019) 22.6 €/ton of CO_2 captured as the minimum for the same rate of CO_2 recovery. Thus, it can be inferred that exergy and productivity for absorption-based carbon capture process are good indicators for operational and investment costs, respectively.

4.2 Adsorption

Figure 24 highlights the cost analysis results applied to the points that form the Pareto fronts exhibited in Figure 25. For clarity, Figure 24 only demonstrates the curves that correspond to the most significant rates of recovery.

Figure 24: Adsorption: Curve of TAC/unit carbon dioxide capture related to Figure 25's Pareto fronts.

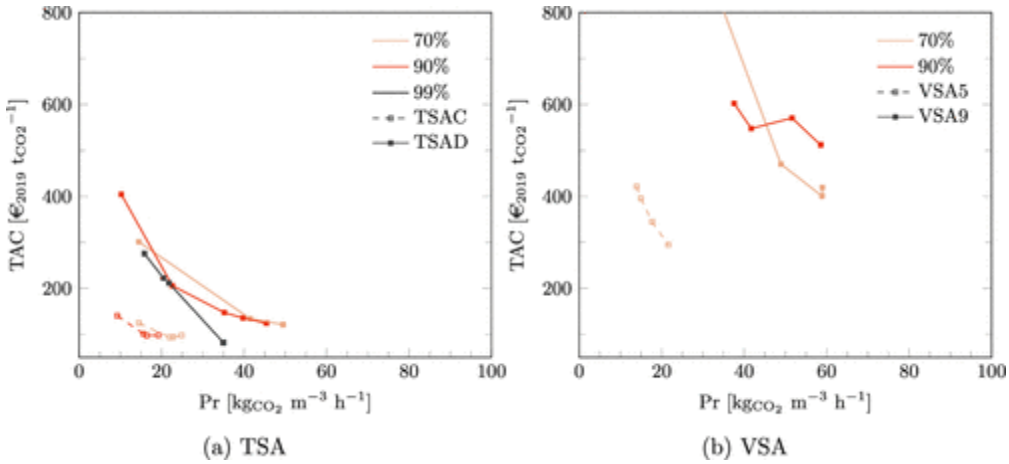

Source: Zanco et al., 2021.

Figure 25*: Adsorption: Data points & exergy-productivity Pareto fronts at various carbon-dioxide rates of recovery for diverse cycle configurations.*

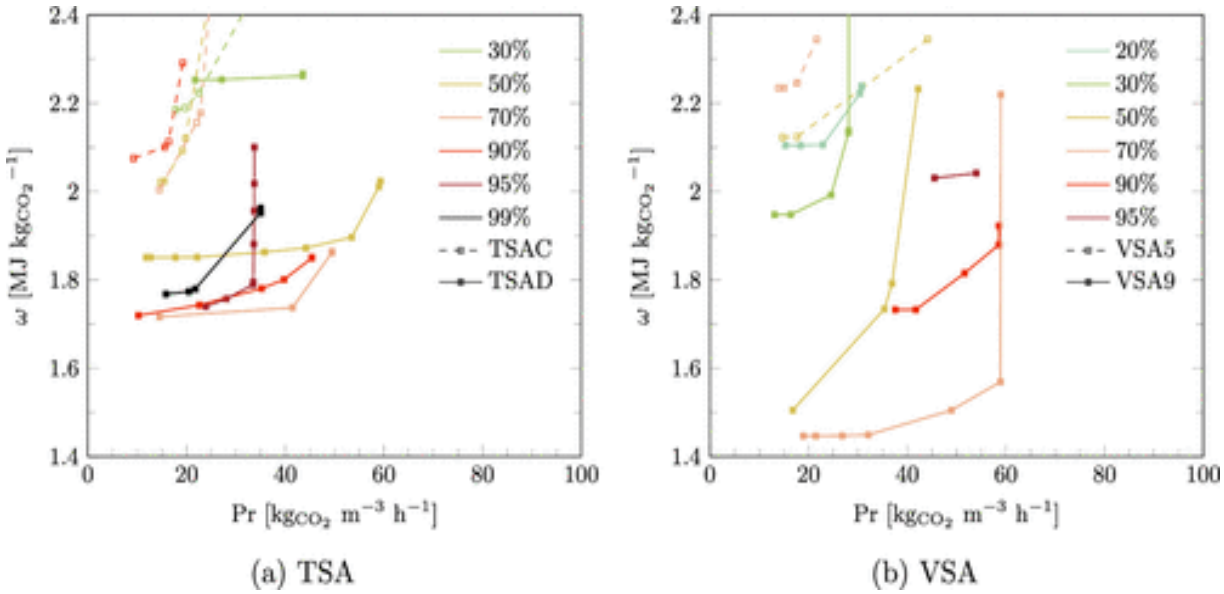

Source: Zanco et al. (2021).

The curves in Figure 24 demonstrate that simpler cycle configurations (TSAC and VSA5) are less costly, for a given rate of recovery, and the costs reduce with the recovery rate. Figure 26 is a comparison of the Pareto point costs, with the cost of all process designs that achieve the separation specification for 90 percent recovery. The TAC point of minimum is located far away

from the Pareto optima, insinuating that an efficiency-based assessment fails to identify the minimum cost region.

***Figure 26**: Adsorption Curve of AOC vs AIC/ton of CO2 captured.*

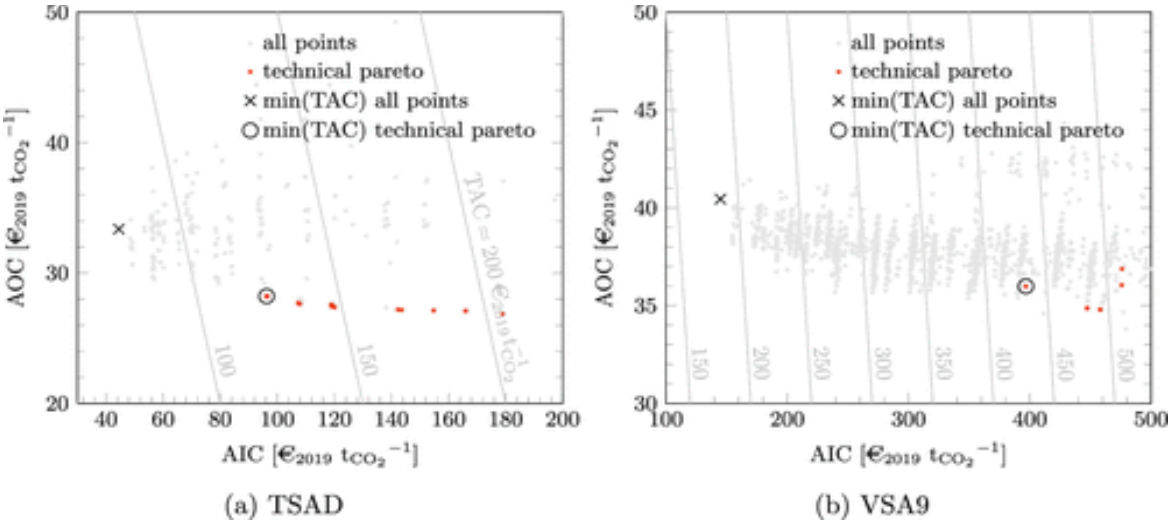

Source: Zanco et al., 2021.

Specifically, the design area the Pareto front identifies fails to include/consider that of the lowest investment costs. The various AOC and AIC axes scales suggest that investment costs significantly affect the TA and the variation between the minimum cost and the absolute minimum cost along the Pareto is significant.

Figure 27 demonstrates the distribution of costs for the configurations' minimum TAC designs that allow for meeting a 90 percent recovery requirement. While the costs related to the Pareto fronts would rank the three technologies variedly, Zanco et al. (2021) asserts that the minimum capture cost at 90% recovery is ultimately found for the TSAD configuration, at ca. 78 € per ton CO_2 captured. The AIC often covers the largest proportion of the total costs as illustrated in Figure 27a. The adoption column costs influence the adsorption-based process' investment costs (Figure 27b), which rises monotonically with both the contactor's size and the number of pieces

needed. Geometrical limitations on the adsorption columns' aspect ratio also relate with the number and size of contactors, making it necessary to deploy either more, smaller or fewer larger columns in order to treat a give gas flow rate. The cost trade-off between a small number of large columns and a large number of small columns favors the previous option, due to the economies of scale considered within the costing functions and due to the fixed costs for every vessel that are independent of the column size. In addition, the cost fraction that relates to the sorbent is limited (about 3% for TSA and 5% for VSA), since Zeolite 13X is slightly cheap.

***Figure 27**: Adsorption: Cost breakdown/unit carbon dioxide capture for the minimum cost designs at 90% recovery.*

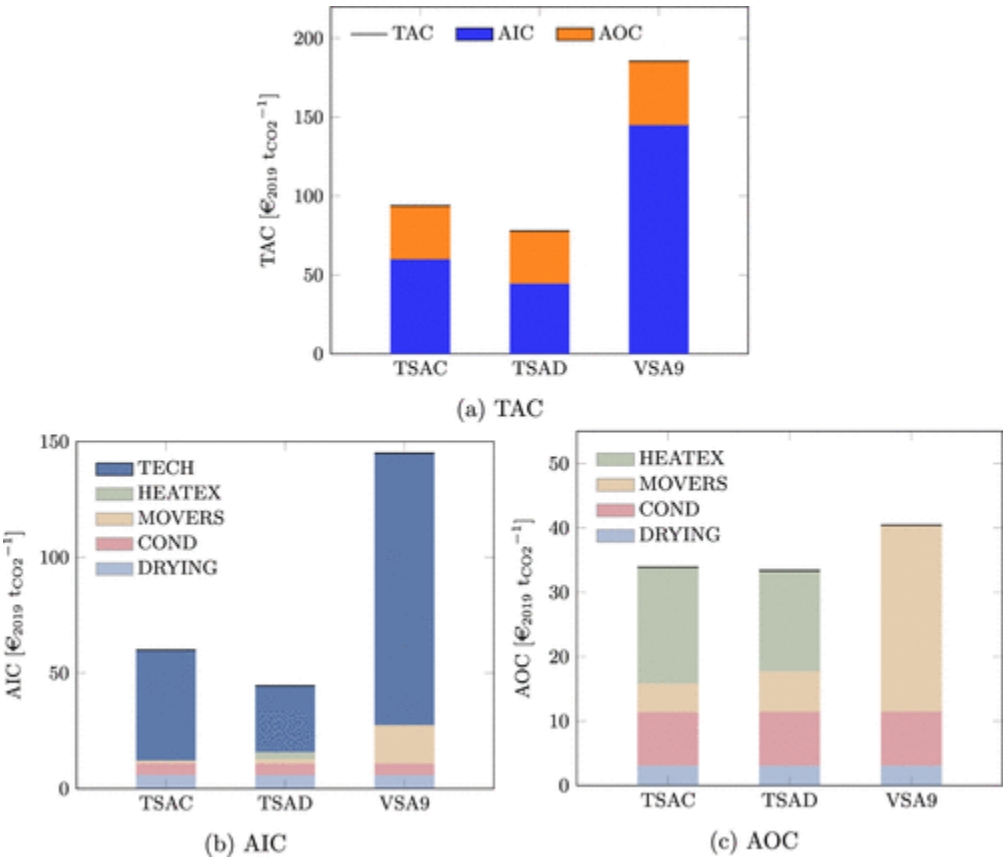

Source: Zanco et al. 2021.

Larger or longer column sizes also affect exergy consumption, therefore, the costs of operation. For a given productivity value, the minimum exergy designs relate with a shorter column, while the minimum costs is established for a longer one, allowing for an AIC reduction of more than

50%. Figure 27c illustrates the effect of various energy sources deployed on the operational cost: the higher electricity price impacts the VSA9 configuration's total AOC compared to that of TSA cases. The exergy breakdown already demonstrated that the costs for flue gas drying and CO_2 conditioning are constant for a specific rate of recovery. They have a significant impact on the total cost since their sum is equivalent to between 25% and 35% of the AIC and AOC. More specifically, the cost of the drying is a direct consequence of Zeolite 13X's use as a sorbent, and it can be avoided in case another sorbent is utilized. Definitely, such a water-resistant adsorbent is likely costlier than Zeolite 13X.

4.3 Membranes

Contrary to the cases of adsorption and absorption, membrane-based processes' cost-analysis is constrained to a few equipment, as it can be observed in Figure 28's layout. They are the gas movers and the membrane modules, that is; vacuum pumps and compressors. Since no heat is utilized for the gas separation, only a small number of heat exchangers are needed in the plant, besides the intercoolers embedded in the gas movers. Consequently, the cost trends emulate the trends of technical indices maximized and epitomized by the Pareto fronts. This leads to two major inferences:

a. The membrane modules' cost correlates with the productivity, depicting a direct balance between the investment costs and the membrane region needed for the separation.

b. The gas movers' cost is proportional to their size (Zanco et al., 2021), which is associated with their power consumption, thus with the specific process' exergy demand.

Figure 28: *The multistage membrane process' schematic with feed splitting and recirculation*

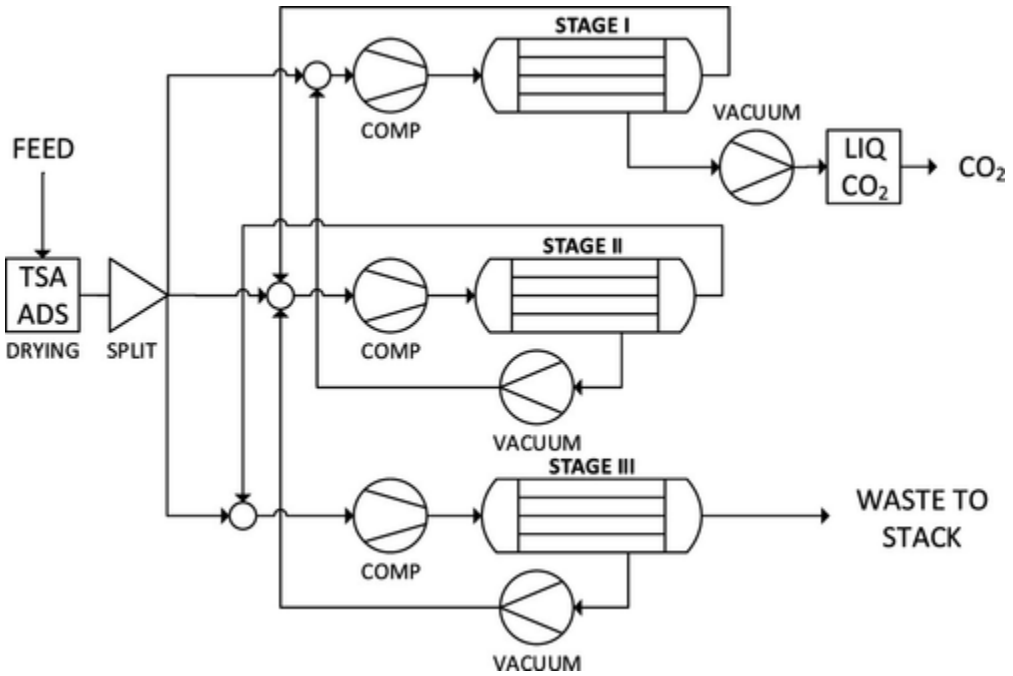

Source: Zanco et al., 2021.

Figure 29 illustrates the cost breakdown for the Pareto front at 90% recovery. The MOVERS' economic effect on the overall cost is illustrated in the operational costs (Figure 29e) and the investment costs (Figure 29c), especially at high productivity values. TECH covers about 50% of the AIC at low productivity (since larger membranes are needed), and this proportion reduces strongly for rising productivity. In contrast, the operational and investment costs related to the conditioning section are almost constant over the whole productivity range. At the same time, the cost proportion of the drying section, while being critical in terms of investment costs, stays the same over the productivity range.

Figure 29: *Membranes: Cost breakdown/unit carbon-dioxide capture for the Pareto front at 90% recovery.*

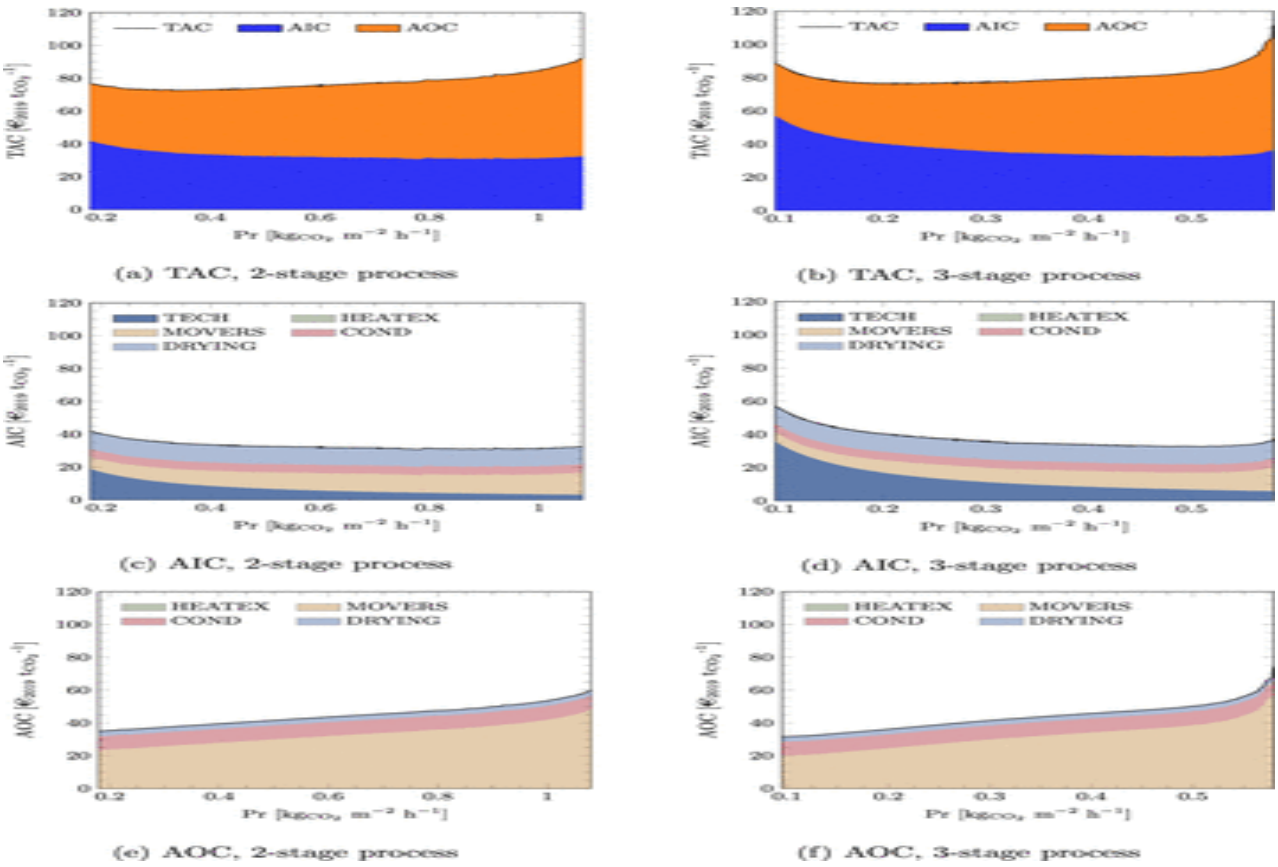

Source: Zanco et al., 2021.

In addition, it is also observed that, moving from a two to a three-stage process, the movers' reducing costs is compensated by the rise in membrane modules' costs, which results in similar overall costs for the two processes.

4.4 Comparative Economic/Cost Assessment of Post-combustion technologies

The analyses on absorption, adsorption, and membranes in the previous subsections are done for a specific rate of recovery of 90% and a particular plant size of 5000 tons of flue gas treated every day and allow one to identify each process' optimal design for those particular process specifications. By redoing the analysis for various plant sizes and recovery rates, Zanco et al. (2021) contended that it is possible to map the optimal design's cost as a function of the two parameters. Figure 30 illustrates the results in terms of TAC/ton of carbon-dioxide captured.

Here, the rate of recovery varies from 10-99%, while the size of plants ranges between 10 and 100,000 tons of flue gas every day, hence covering a wide range of industrial application scales.

In Figure 30, the contour lines illustrate the cost as TAC/unit mass carbon-dioxide captured, in $€_{2019}/t_{CO2capt}$.

***Figure 30**: Cost maps as a function of plant size and recovery rate for the three technologies.*

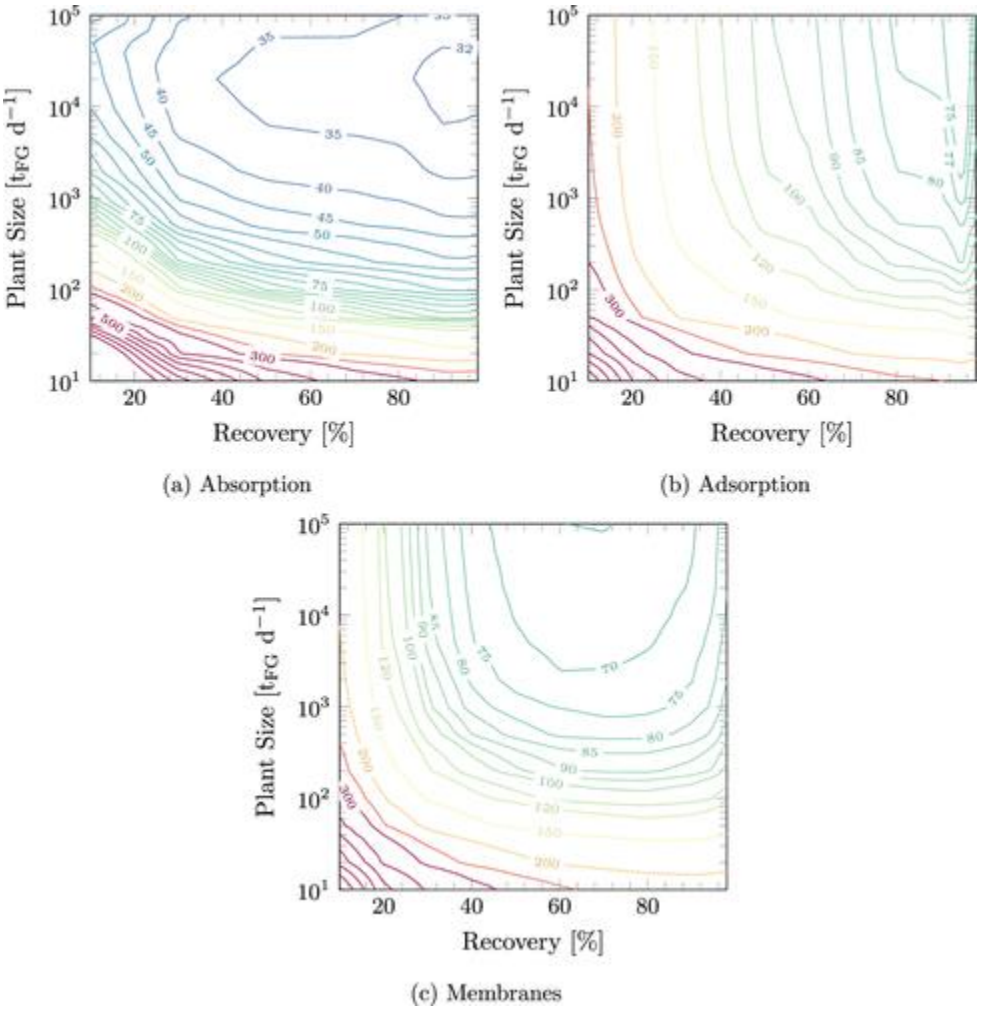

The first common trend observed in the three processes is that costs of carbon-dioxide captured reduce with plant size due to economies of scale. The cost curve often monotonically reduces for adsorption and membrane-based processes (Figure 30 b and c). For the two technologies, the capture plant is made up of a large number of separation subunits operating in parallel.

Regarding these separation subunits, increasing the capture plant size over a given threshold leads into the scaling-out instead of into the scaling up of the equipment's single pieces. Since both membrane and adsorption modules are limited in their maximum size, the costs demonstrate a less steep relationship with the plant size. Notwithstanding, while scaling-out mitigates the advantages of the economies of scale, their impacts still influence the buying price of the other equipment, leading to a TAC curve that reduces monotonically toward larger plant sizes for membrane and adsorption-based capture technologies. Rather, a significant difference is noted for the absorption case (Figure 30a), where the minimum cost for the largest plant size is not found. The threshold plant size for absorption-premised processes at which scaling-up impacts commenced fading is remarkably higher (approximately 20,000 tons of processed flue gas every day).

Regarding TAC values, the three maps in Figure 30 rank the three processes. Absorption using an aqueous piperazine solution is the cheapest option for plant sizes larger than 100 tons of flue gas processed every day. For small plant size the membrane and adsorption-based processes become more cost competitive and ultimately, below a certain plant size, less expensive than the absorption process. However, it is worth noting that costs are probably too high to provide economic feasibility.

Overall, this comparative economic assessment denotes that the simple absorption process deploying an aqueous solution of piperazine is economically more viable than membrane and adsorption-based separation processes. However, the adsorption and membrane processes become competitive in terms of costs for extremely low rates of recovery and small plant sizes, but where the capture cost is quite high. From this analysis, it can be deduced that it is important to bridge the large cost gap for the membrane and adsorption-based processes to become

competitive. Water-withstanding membrane and adsorbent materials together with more complex process layouts can help address the observed cost trends.

4.5 Hydrate-Based Technology

Hydrate-based CSS had been identified as a promising alternative for energy-efficient carbon capture. While numerous studies provide information on the technical enhancements within hydrate-based CO_2 capture methods, few have examined economic considerations (Nguyen et al., 2022). Babu et al. (2015) made a comparison based on 500 MW of electricity generated by a coal gasifier. The authors compared the hydrate-based CO_2 capture with SIMTECHE and SELEXOL processes. The findings illustrated that electricity's estimated cost was 6.13 and 6.24 cents per kilowatt hours for a twin-stage Tetrahydrofuran (THF) promotor system. In contrast, there is a lack of data for CO_2 sequestration's economic analysis, particularly on hydrates within geological settings, because of the lack of technological maturity in this area. Duc et al. (2007) estimated the cost of a hydrate-premised CO_2 capture technology using a TBAB promoter, which captures carbon dioxide from the steel producing industry's flue gases. The study established that the costs of reducing CO_2 emissions were between $20 and $40/metric ton of carbon dioxide, based on feed gas quality and operational parameters. The values of customer acquisition were found to be lower compared to the **standard absorption method, which costs from $40 to $100/ton of carbon dioxide captured** (Dashti & Lou, 2018). From this finding, various authors have argued that hydrate-based technology is more amenable compared to syngas applications, as Spencer et al. (1998) reported. According to Spencer et al. (1998), the cost of energy associated with using **hydrates for capturing carbon dioxide is lowered by between 50% and 75% than using absorption**. In this regard, **hydrate-based capture is a more cost-effective and sustainable alternative than absorption-based** CO capture.

4.6 Further Comparisons

Kheirinik, Ahmed and Rahmanian (2021) established that pre-combustion is the costliest process to implement and operate in its life span because it needs significantly more overall investment than oxy-fuel CCS technology. It is mainly because of the complexity of the process and litany of operation units needed for successfully implementing capture technology. While the oxy-fuel process was found to be more economic in terms of capital, investment costs, and LCOE, Kheirinik et al. (2021) contend that it has been unable to operate on a commercial scale. Thus, the study argued that if a company aims to implement pre-combustion, oxy-fuel, and post-combustion technologies, post-combustion is the most attractive since it leads to less disruption to existing operations and reduce the loss of revenue attributed to revamping and shutting down plants. It needs less total indirect and investment costs, such as salaries and utilities. In addition, because of the maturity of such technologies compared to others, it would be safer. In this regard, post-combustion stands as a better alternative.

From the above comparison of absorption, adsorption, membranes, and hydrate-based carbon capture technologies, hydrate-based capture has been identified as a more sustainable and cost-effective option, followed by absorption and membrane and adsorption technologies.

5.0 CONCLUSIONS

Energy demands continue rising, and a significant portion of energy is produced using fossil fuels. The gaseous pollutant emissions from fossil fuel power plants include CO_2, which is the main cause for the emission causing climate change and global warming. The Paris Agreement is geared towards zero-emission through the capture of carbon dioxide released into the atmosphere as a result of anthropogenic activities. According to the International Energy Agency report (2020), global energy transition can be done using green hydrogen, renewable energy, bioenergy and CCUS in order to minimize emissions within large-scale industries.

This paper sought to determine the most economically viable CCUS for reducing carbon emissions. The introduction covered greenhouse gases, global warming, and climate change. Chapter 2 covered economical data on global carbon-dioxide taxation, while Chapter 3 examined the basic technologies of carbon capture. The economics on carbon capture technologies was examined in Chapter 4. Critical issues linked to the progress of contemporary technologies premised on pre-combustion, oxy-combustion, and post-combustion methods have been examined.

Chapter 2 determined that carbon taxes should be considered in the climate change context. However, the focus should be a holistic policy mix that embeds several policy interventions. Despite carbon taxes being inadequate as standalone solutions, they can effectively reduce carbon emissions. Fuel taxes have particularly been found to have a progressive effect in many states, while electricity and heating fuel gases are regressive.

In Chapter 3, the advantages and disadvantages of post-combustion technologies are illustrated in Table 2 while the pros and cons of hydrates are presented in Table 3. The absorption-based combustion capture is the most widely deployed method because of its lower energy

consumption and efficiency. It also attains the best results for high pressures and low temperatures of the separated gas. Adsorption's strength is that it can capture CO_2 and H_2S together, preventing it from getting into the atmosphere. In addition, it has a higher capturing capacity and less heating than absorption-based carbon capture. Despite these strengths, it is also limited in terms of low-pressure carbon and handling heat in a solid material. In contrast, hybrid membranes provide benefits of both polymeric and ceramic membranes, including low production cost, flexibility, and high selectivity.

For hydrates, they are increasingly being embraced due to their lower energy requirements compared to conventional capturing technology. It is perceived to cause less harm on the environment. However, one of its major limitations is that because hydrate formation is mainly a crystallization process, there is a need for saturation conditions – and hydrate formation being predominantly an exothermic process, higher hydrate formation rate results in higher heat generation and subsequent increase of the reactor temperature.

In terms of cost and economics, pre-combustion is the most expensive process due to the high investment cost compared to oxy-fuel technology. Despite the oxy-fuel process being more economic in terms of LCOE, investment costs, and capital, its ability to operate on a commercial scale has been found to be limited. With this in mind, post-combustion technologies are more attractive due to the need for less investment and indirect costs, including utilities and salaries. From the comparison in Chapter 4, absorption and hydrate-based carbon capture technologies are the most comparable in terms of use and cost. Hydrate-based CCUS is a more cost-effective and sustainable alternative.

6.0 References

Aaron, D., & Tsouris, C. (2005). Separation of CO2 from flue gas: a review. *Separation science and technology*, *40*(1-3), 321-348.

Aghel, B., Behaein, S., & Alobiad, F. (2022). CO2 capture from biogas by biomass-based adsorbents: A review. *Fuel*, *328*, 125276.

Aghel, B., Janati, S., Wongwises, S., & Shadloo, M. S. (2022). Review on CO2 capture by blended amine solutions. *International Journal of Greenhouse Gas Control*, *119*, 103715.

Almashwali, A. A., Bavoh, C. B., Lal, B., Khor, S. F., Jin, Q. C., & Zaini, D. (2022). Gas hydrate in oil-dominant systems: a review. *ACS omega*, *7*(31), 27021-27037.

Andersen, M. S. (2004). Vikings and virtues: a decade of CO2 taxation. *Climate Policy*, *4*(1), 13-24.

Andersen, M. S., & Ekins, P. (Eds.). (2009). *Carbon-energy taxation: lessons from Europe*. OUP Oxford.

Andersen, M., Speck, S., Barker, T., Junankar, S., Pollitt, H., Fitz Gerald, J., ... & Michael Landesmann, M. (2007). Competitiveness effects of environmental tax reforms (COMETR). Final report to the European Commission, DG Research and DG TAXUD.

Anderson, T. R., Hawkins, E., & Jones, P. D. (2016). CO2, the greenhouse effect and global warming: from the pioneering work of Arrhenius and Callendar to today's Earth System Models. *Endeavour*, *40*(3), 178-187.

Andersson, J. J. (2019). Carbon taxes and CO 2 emissions: Sweden as a case study. *American Economic Journal: Economic Policy*, *11*(4), 1-30.

Andersson, J., & Atkinson, G. (2020). *The distributional effects of a carbon tax: The role of income inequality*. Grantham Research Institute on Climate Change and the Environment.

Antweiler, W., & Gulati, S. (2016). Frugal cars or frugal drivers? How carbon and fuel taxes influence the choice and use of cars. *How Carbon and Fuel Taxes Influence the Choice and Use of Cars (May 11, 2016)*.

Arrhenius, S. (1896). XXXI. On the influence of carbonic acid in the air upon the temperature of the ground. *The London, Edinburgh, and Dublin Philosophical Magazine and Journal of Science*, *41*(251), 237-276.

Artanto, Y., Jansen, J., Pearson, P., Puxty, G., Cottrell, A., Meuleman, E., & Feron, P. (2014). Pilot-scale evaluation of AMP/PZ to capture CO2 from flue gas of an Australian brown coal–fired power station. *International journal of Greenhouse Gas control*, *20*, 189-195.

Aydin, C., & Esen, Ö. (2018). Reducing CO2 emissions in the EU member states: Do environmental taxes work? *Journal of Environmental Planning and Management*, *61*(13), 2396-2420.

Azevedo, D., Wolff, H., & Yamazaki, A. (2022). Do carbon taxes kill jobs? Firm-level evidence from British Columbia. *Firm-Level Evidence from British Columbia (October 8, 2022). Climate Change Economics, Forthcoming*.

Babu, P., Linga, P., Kumar, R., & Englezos, P. (2015). A review of the hydrate-based gas separation (HBGS) process for carbon dioxide pre-combustion capture. *Energy*, *85*, 261-279.

Baranzini, A., Van den Bergh, J. C., Carattini, S., Howarth, R. B., Padilla, E., & Roca, J. (2017). Carbon pricing in climate policy: seven reasons, complementary instruments, and political economy considerations. *Wiley Interdisciplinary Reviews: Climate Change*, *8*(4), e462.

Barzagli, F., Lai, S., & Mani, F. (2014). Novel non-aqueous amine solvents for reversible CO2 capture. *Energy Procedia*, *63*, 1795-1804.

Beck, M., Rivers, N., Wigle, R., & Yonezawa, H. (2015). Carbon tax and revenue recycling: Impacts on households in British Columbia. *Resource and Energy Economics*, *41*, 40-69.

Bernard, J. T., Kichian, M., & Islam, M. (2018). Effects of BC's Carbon Tax on GDP. *USAEE research paper series*, (18-329).

Bi, Y., & Ju, Y. (2022). Review on cryogenic technologies for CO2 removal from natural gas. *Frontiers in Energy*, 1-19.

Blasing, T. J., & Smith, K. (2016). Recent greenhouse gas concentrations.

Boot-Handford, M. E., Abanades, J. C., Anthony, E. J., Blunt, M. J., Brandani, S., Mac Dowell, N., ... & Fennell, P. S. (2014). Carbon capture and storage update. *Energy & Environmental Science*, *7*(1), 130-189.

Bosquet, B. (2000). Environmental tax reform: does it work? A survey of the empirical evidence. *Ecological economics*, *34*(1), 19-32.

Brännlund, R., & Nordström, J. (2004). Carbon tax simulations using a household demand model. *European Economic Review*, *48*(1), 211-233.

Brännlund, R., Lundgren, T., & Marklund, P. O. (2014). Carbon intensity in production and the effects of climate policy—evidence from Swedish industry. *Energy Policy*, *67*, 844-857.

Bruvoll, A., & Larsen, B. M. (2004). Greenhouse gas emissions in Norway: do carbon taxes work?. *Energy policy*, *32*(4), 493-505.

Butler, J. H., & Montzka, S. A. (2016). The NOAA annual greenhouse gas index (AGGI). *NOAA Earth System Research Laboratory*, *58*, 55-75.

Butler, J. H., & Montzka, S. A. (2016). The NOAA annual greenhouse gas index (AGGI). *NOAA Earth System Research Laboratory*, *58*, 55-75.

Callan, T., Lyons, S., Scott, S., Tol, R. S., & Verde, S. (2009). The distributional implications of a carbon tax in Ireland. *Energy Policy*, *37*(2), 407-412.

Campbell, J. M., Maddox, R. N., Lilly, L. L., & Hubbard, R. A. (1984). *Gas conditioning and processing* (Vol. 1). Norman, Oklahoma: Campbell Petroleum Series.

Chang, P. T., Ng, Q. H., Ahmad, A. L., & Low, S. C. (2022). A critical review on the techno-economic analysis of membrane gas absorption for CO2 capture. *Chemical Engineering Communications*, *209*(11), 1553-1569.

Cho, R. (June 20, 2019). *How climate change impacts the economy*. Retrieved on April 18, 2023

from https://lamont.columbia.edu/news/how-climate-change-impacts-economy

Collins, M., R. Knutti, J. Arblaster, J.-L. Dufresne, T. Fichefet, P. Friedlingstein, X. Gao, W.J. Gutowski, T. Johns, G. Krinner, M. Shongwe, C. Tebaldi, A.J. Weaver and M. Wehner, (2013). Long-term Climate Change: Projections, Commitments and Irreversibility. In: *Climate Change 2013: The Physical Science Basis. Contribution of Working Group I to the Fifth Assessment Report of the Intergovernmental Panel on Climate Change*. Cambridge University Press, Cambridge.

Cronin, J. A., Fullerton, D., & Sexton, S. (2019). Vertical and horizontal redistributions from a carbon tax and rebate. *Journal of the Association of Environmental and Resource Economists*, *6*(S1), S169-S208.

Darman, N. H., & Harun, A. R. (2006, May). Technical challenges and solutions on natural gas development in Malaysia. In *The petroleum policy and management project, 4th Workshop of the China-Sichuan Basin Study, Beijing, China*.

Dashti, H., & Lou, X. (2018). Gas hydrate-based CO 2 separation process: quantitative assessment of the effectiveness of various chemical additives involved in the process. In *Energy Technology 2018: Carbon Dioxide Management and Other Technologies* (pp. 3-16). Springer International Publishing.

de Oliveira Silva, R., Barioni, L. G., Hall, J. A. J., Folegatti Matsuura, M., Zanett Albertini, T., Fernandes, F. A., & Moran, D. (2016). Increasing beef production could lower greenhouse gas emissions in Brazil if decoupled from deforestation. *Nature Climate Change*, *6*(5), 493-497.

Desideri, U. (2010). Advanced absorption processes and technology for carbon dioxide (CO2) capture in power plants. In *Developments and innovation in carbon dioxide (CO2) capture and storage technology* (pp. 155-182). Woodhead Publishing.

Douenne, T. (2020). The vertical and horizontal distributive effects of energy taxes: A case study of a french policy. *The Energy Journal*, *41*(3), 231-254.

Dragos, L., Nada, O., Flueraru, C., & Scarlat, N. (1996). Romanian researches for CO2 recovery. *Energy conversion and management*, *37*(6-8), 923-928.

Du, J. D., Han, W. J., Peng, Y. H., & Gu, C. C. (2010). Potential for reducing GHG emissions and energy consumption from implementing the aluminum intensive vehicle fleet in China. *Energy*, *35*(12), 4671-4678.

Duc, N. H., Chauvy, F., & Herri, J. M. (2007). CO2 capture by hydrate crystallization–A potential solution for gas emission of steelmaking industry. *Energy Conversion and Management*, *48*(4), 1313-1322.

Dussaux, D. (2020). The joint effects of energy prices and carbon taxes on environmental and economic performance: Evidence from the French manufacturing sector. OECD Working Paper No. 154.

Edenhofer, O., Franks, M., & Kalkuhl, M. (2021). Pigou in the 21st Century: a tribute on the occasion of the 100th anniversary of the publication of The Economics of Welfare. *International Tax and Public Finance*, 1-32.

Elgie, S., & McClay, J. (2013). Policy Commentary/Commentaire BC's carbon tax shift is

working well after four years (attention Ottawa). *Canadian Public Policy*, *39*(Supplement 2), S1-S10.

Eliasson, J., Pyddoke, R., & Swärdh, J. E. (2018). Distributional effects of taxes on car fuel, use, ownership and purchases. *Economics of Transportation*, *15*, 1-15.

Energy Technology Perspectives (2020). *Special Report on Carbon Capture Utilisation and Storage CCUS in Clean Energy Transitions*; IEA: Paris, France, 2020; Available online: https://iea.blob.core.windows.net/assets/7f8aed40-89af-4348-be19-c8a67df0b9ea/Energy_Technology_Perspectives_2020_PDF.pdf

EPA (2019a). Global non-greenhouse gas emission projecttions and mitigation, 2015-2050. Retrieved on April 23 from https://www.epa.gov/global-mitigation-non-co2-greenhouse-gases

EPA (2019b). Annual Energy Outlook 2019: Energy-related carbon-dioxide emissions by sector and source. Retrieved on April 24, 2023 from https://www.eia.gov/outlooks/aeo/data/browser/#/?id=17-AEO2019&cases=ref2019&sourcekey=0

EPA (May 19, 2022). *Carbon Pollution from Transportation*. https://www.epa.gov/transportation-air-pollution-and-climate-change/carbon-pollution-transportation

Feindt, S., Kornek, U., Labeaga, J. M., Sterner, T., & Ward, H. (2021). Understanding regressivity: Challenges and opportunities of European carbon pricing. *Energy Economics*, *103*, 105550.

Feng, K., Hubacek, K., Guan, D., Contestabile, M., Minx, J., & Barrett, J. (2010). Distributional effects of climate change taxation: the case of the UK. *nvironmental Science and Technology*, 44(10), 3670–3676.

Fernando, S. (2019). The environmental effectiveness of carbon taxes: A comparative case study of the Nordic experience. In World Bank (ed). First International Conference on Carbon Pricing (pp.313-332).

Flues, F., & Thomas, A. (2015). The distributional effects of energy taxes. *OECD Taxation Working Paper No. 23*.

Freire-González, J. (2018). Environmental taxation and the double dividend hypothesis in CGE modelling literature: A critical review. *Journal of Policy Modeling*, *40*(1), 194-223.

Gadipelli, P. (2021). A Review on CO2 Emission, Capturing and Storage. *Mazedan Chemical Research Journal*, *2*, 15-17.

Gardarsdottir, S. O., De Lena, E., Romano, M., Roussanaly, S., Voldsund, M., Pérez-Calvo, J. F., ... & Cinti, G. (2019). Comparison of technologies for CO2 capture from cement production—Part 2: Cost analysis. *Energies*, *12*(3), 542.

Gillis, J. (2013). Heat-trapping gas passes milestone, raising fears. *New York Times*, *11*.

Global Carbon Project (2018). *Carbon budget*. http://www.globalcarbonproject.org/carbonbudget/15/data.htm

Gouedard, C., Picq, D., Launay, F., & Carrette, P. L. (2012). Amine degradation in CO2 capture.

I. A review. *International journal of greenhouse gas control*, *10*, 244-270.

Goulder, L. H. (2013). Climate change policy's interactions with the tax system. *Energy Economics*, *40*, S3-S11.

Goulder, L. H., Hafstead, M. A., Kim, G., & Long, X. (2019). Impacts of a carbon tax across US household income groups: What are the equity-efficiency trade-offs? *Journal of Public Economics*, *175*, 44-64.

Grainger, A., & Smith, G. (2021). The role of low carbon and high carbon materials in carbon neutrality science and carbon economics. *Current Opinion in Environmental Sustainability*, *49*, 164-189.

Granite, E. J., & O'Brien, T. (2005). Review of novel methods for carbon dioxide separation from flue and fuel gases. *Fuel processing technology*, *86*(14-15), 1423-1434.

Green, J. F. (2021). Does carbon pricing reduce emissions. A review of ex-post analyses. *Environmental Research Letters*, 16(4).

Han, Y., & Ho, W. W. (2018). Recent advances in polymeric membranes for CO2 capture. *Chinese Journal of Chemical Engineering*, *26*(11), 2238-2254.

Hannun, R. M., & Razzaq, A. H. A. (2022, March). Air Pollution Resulted from Coal, Oil and Gas Firing in Thermal Power Plants and Treatment: A Review. In *IOP Conference Series: Earth and Environmental Science* (Vol. 1002, No. 1, p. 012008). IOP Publishing.

Hasan, M. F., Baliban, R. C., Elia, J. A., & Floudas, C. A. (2012). Modeling, simulation, and optimization of postcombustion CO2 capture for variable feed concentration and flow rate. 2. Pressure swing adsorption and vacuum swing adsorption processes. *Industrial & engineering chemistry research*, *51*(48), 15665-15682.

Horowitz, J. K., Cronin, J. A., Hawkins, H., Konda, L., & Yuskavage, A. (2017). *Methodology for analyzing a carbon tax*. Office of Tax Analysis. The Department of the Treasury. Accessed on April 24, 2023 from https://www.treasury.gov/resource-center/tax-policy/tax-analysis/Documents/WP-115.pdf

Huesemann, M. H. (2003). The limits of technological solutions to sustainable development. *Clean technologies and environmental policy*, *5*, 21-34.

IEA (2022*). CO2 emissions from energy combustion and industrial processes, 1900-2021*. October 26, 2022. *https://www.iea.org/data-and-statistics/charts/co2-emissions-from-energy-combustion-and-industrial-processes-1900-2021*

IEA (2022). *Global Energy Review: CO2 Emissions in 2021*. https://www.iea.org/reports/global-energy-review-co2-emissions-in-2021-2

IMF. (2019). Fiscal Policies for Paris Climate Strategies–from Principle to Practice. *IMF Policy Paper No*. https://www.imf.org/en/Publications/Policy-Papers/Issues/2019/05/01/Fiscal-Policies-for-Paris-Climate-Strategies-from-Principle-to-Practice-46826.

Intergovernmental Panel on Climate Change, I. P. C. C. (2014). SynthesisReport: Summary for Policymakers. *Fifth Assessment Report*.

Jerbi, S., Delahaye, A., Fournaison, L., & Haberschill, P. (2010). Characterization of CO2 hydrate formation and dissociation kinetics in a flow loop. *International journal of*

refrigeration, *33*(8), 1625-1631.

Joint Committee on Taxation (2011*). The income and payroll tax offset changes in excise tax revenues*. https://www.jct.gov/publications.html?func=startdown&id=4378

Joint Committee on Taxation (2018). *New income and payroll tax offsets to change in excise tax revenues for 2018-2028.* https://www.jct.gov/publications.html?func=startdown&id=5066

Jones, J. H., Froning, H. R., & Claytor Jr, E. E. (1959). Solubility of Acidic Gases in Aqueous Monoethanolamine. *Journal of chemical and engineering data*, *4*(1), 85-92.

Kárászová, M., Zach, B., Petrusová, Z., Červenka, V., Bobák, M., Šyc, M., & Izák, P. (2020). Post-combustion carbon capture by membrane separation, Review. *Separation and Purification Technology*, *238*, 116448.

Kaur, B., Gupta, R. K., & Bhunia, H. (2019). Chemically activated nanoporous carbon adsorbents from waste plastic for CO2 capture: Breakthrough adsorption study. *Microporous and Mesoporous Materials*, *282*, 146-158.

Kerkhof, A. C., Moll, H. C., Drissen, E., & Wilting, H. C. (2008). Taxation of multiple greenhouse gases and the effects on income distribution: A case study of the Netherlands. *Ecological Economics*, *67*(2), 318-326.

Khan, M. S., Yaqub, S., Manner, N., Karthwathi, N. A., Qasim, A., Mellon, N. B., & Lal, B. (2018, April). Experimental equipment validation for methane (CH4) and carbon dioxide (CO2) hydrates. In *IOP Conference Series: Materials Science and Engineering* (Vol. 344, No. 1, p. 012025). IOP Publishing.

Kheirinik, M., Ahmed, S., & Rahmanian, N. (2021). Comparative techno-economic analysis of carbon capture processes: Pre-combustion, post-combustion, and oxy-fuel combustion operations. *Sustainability*, *13*(24), 13567.

Klenert, D., Mattauch, L., Combet, E., Edenhofer, O., Hepburn, C., Rafaty, R., & Stern, N. (2018). Making carbon pricing work for citizens. *Nature Climate Change*, *8*(8), 669-677.

Kohlscheen, E., Moessner, R., & Takats, E. (2021). Effects of Carbon Pricing and Other Climate Policies on CO 2 Emissions. CESifo Working Paper No. 9347.

Kosonen, K. (2012). Regressivity of environmental taxation: myth or reality? In *Handbook of research on environmental taxation* (pp. 161-174). Edward Elgar Publishing.

Kweku, D. W., Bismark, O., Maxwell, A., Desmond, K. A., Danso, K. B., Oti-Mensah, E. A., ... & Adormaa, B. B. (2018). Greenhouse effect: greenhouse gases and their impact on global warming. *Journal of Scientific research and reports*, *17*(6), 1-9.

Labandeira, X., & Labeaga, J. (1999). Combining input-output analysis and micro-simulation to assess the effects of carbon taxation on Spanish households. *Fiscal studies*, *20*(3), 305-320.

Lan, X., Hall, B. D., Dutton, G., Mühle, J., & Elkins, J. W. (2020). Atmospheric composition. In *State of the Climate in 2019, Chapter 2: Global Climate] (Special Online Supplement to the Bulletin of the American Meteorological Society*, *101*(8).

Larsen, B. M., & Nesbakken, R. (1997). Norwegian emissions of CO 2 1987–1994: a study of some effects of the CO 2 tax. *Environmental and Resource Economics*, *9*, 275-290.

Larsen, P. B. J., Mohan, S., Marsters, P., & Herndon, W. (2018). Energy and environmental implications of a carbon tax in the United States. Carl, J., & Fedor, D. (2016). Tracking global carbon revenues: A survey of carbon taxes versus cap-and-trade in the real world. *Energy Policy*, *96*, 50-77.

Lawley, C., & Thivierge, V. (2018). Refining the evidence: British Columbia's carbon tax and household gasoline consumption. *The Energy Journal*, *39*(2).

Leahy, S., Clark, H., & Reisinger, A. (2020). Challenges and prospects for agricultural greenhouse gas mitigation pathways consistent with the Paris Agreement. *Frontiers in Sustainable Food Systems*, *4*, 69.

Letcher, T. M. (2020). Introduction with a focus on atmospheric carbon dioxide and climate change. In *Future energy* (pp. 3-17). Elsevier.

Li, J. R., Ma, Y., McCarthy, M. C., Sculley, J., Yu, J., Jeong, H. K., ... & Zhou, H. C. (2011). Carbon dioxide capture-related gas adsorption and separation in metal-organic frameworks. *Coordination Chemistry Reviews*, *255*(15-16), 1791-1823.

Lin, B., & Li, X. (2011). The effect of carbon tax on per capita CO2 emissions. *Energy policy*, *39*(9), 5137-5146.

Lindsey, R. (2009). *Climate and Earth's energy budget*. Accessed April 24, 2023.

Linga, P., Kumar, R., Lee, J. D., Ripmeester, J., & Englezos, P. (2010). A new apparatus to enhance the rate of gas hydrate formation: Application to capture of carbon dioxide. *International Journal of Greenhouse Gas Control*, *4*(4), 630-637.

Luo, R., Li, Y., Wang, Z., & Sun, M. (2022). Co-Movement between Carbon Prices and Energy Prices in Time and Frequency Domains: A Wavelet-Based Analysis for Beijing Carbon Emission Trading System. *International Journal of Environmental Research and Public Health*, *19*(9), 5217.

Lüthi, D., M. Le Floch, B. Bereiter, T. Blunier, J.-M. Barnola, U. Siegenthaler, D. Raynaud, J. Jouzel, H. Fischer, K. Kawamura, and T.F. Stocker. (2008). High-resolution carbon dioxide concentration record 650,000-800,000 years before present. *Nature*, Vol. 453, pp. 379-382. doi:10.1038/nature06949.

MacDowell, N., Florin, N., Buchard, A., Hallett, J., Galindo, A., Jackson, G., ... & Fennell, P. (2010). An overview of CO 2 capture technologies. *Energy & Environmental Science*, *3*(11), 1645-1669.

Maddox, R. N. (1982). *Gas Conditioning and Processing: Volume 4: Gas and Liquid Sweetening*. Campbell Petroleum Series.

Madejski, P., Chmiel, K., Subramanian, N., & Kuś, T. (2022). Methods and techniques for CO2 capture: Review of potential solutions and applications in modern energy technologies. *Energies*, *15*(3), 887.

Madejski, P., Chmiel, K., Subramanian, N., & Kuś, T. (2022). Methods and techniques for CO2 capture: Review of potential solutions and applications in modern energy technologies. *Energies*, *15*(3), 887.

Martin, R., De Preux, L. B., & Wagner, U. J. (2014). The impact of a carbon tax on

manufacturing: Evidence from microdata. *Journal of Public Economics*, *117*, 1-14.

Mathur, A., & Morris, A. C. (2014). Distributional effects of a carbon tax in broader US fiscal reform. *Energy Policy*, *66*, 326-334.

McInnes, G. (2017). Understanding the distributional and household effects of the low-carbon transition in G20 countries. OECD Publishing.

Meinshausen, M., Vogel, E., Nauels, A., Lorbacher, K., Meinshausen, N., Etheridge, D. M., ... & Weiss, R. (2017). Historical greenhouse gas concentrations for climate modelling (CMIP6). *Geoscientific Model Development*, *10*(5), 2057-2116.

Metcalf, G. E. (2019). On the economics of a carbon tax for the United States. *Brookings Papers on Economic Activity*, *2019*(1), 405-484.

Metcalf, G. E. (2021). Carbon taxes in theory and practice. *Annual Review of Resource Economics*, *13*, 245-265.

Metcalf, G. E., & Stock, J. H. (2020b). *The macroeconomic impact of Europe's carbon taxes* (No. w27488). National Bureau of Economic Research.

Metcalf, G. E., & Stock, J. H. (2020b, May). Measuring the macroeconomic impact of carbon taxes. In *AEA Papers and Proceedings* (Vol. 110, pp. 101-106). 2014 Broadway, Suite 305, Nashville, TN 37203: American Economic Association.

Metcalf, G. E., & Weisbach, D. (2009). The design of a carbon tax. *Harv. Envtl. L. Rev.*, *33*, 499.

Mideksa, T. K. (2021). Pricing for a Cooler Planet: An Empirical Analysis of the Effect of Taxing Carbon. Working Paper No. 9172.

Mideksa, T. K., & Kallbeken, S. (2012). The environmental effectiveness of carbon taxes: Empirical evidence from the Norwegian carbon tax. *Miemo, CICERO Center for International Climate and Environmental Research-Oslo, https://drive. google. com/file/d/1YzIw-0P2MUZSOjvO47PT0WvBJjef21n1/view*.

Mori, H. (2003). Recent advances in hydrate-based technologies for natural gas storage——a review. *化工学报*, (z1), 1-17.

Mulder, K. (2017). Chlorofluorocarbons: Drivers of their emergence and substitution. In *What is Sustainable Technology?* (pp. 22-38). Routledge.

Murray, B., & Rivers, N. (2015). British Columbia's revenue-neutral carbon tax: A review of the latest "grand experiment" in environmental policy. *Energy Policy*, *86*, 674-683.

Naquash, A., Qyyum, M. A., Haider, J., Bokhari, A., Lim, H., & Lee, M. (2022). State-of-the-art assessment of cryogenic technologies for biogas upgrading: Energy, economic, and environmental perspectives. *Renewable and Sustainable Energy Reviews*, *154*, 111826.

NASA (2010). *Is current warming natural*? Earth observatory. Retrieved from https://earthobservatory.nasa.gov/features/GlobalWarming/page4.php

NASA (2023). *What is the greenhouse effect?* Retrieved on April 18 from https://climate.nasa.gov/faq/19/what-is-the-greenhouse-effect/

Nguyen, N. N., La, V. T., Huynh, C. D., & Nguyen, A. V. (2022). Technical and economic perspectives of hydrate-based carbon dioxide capture. *Applied Energy*, *307*, 118237.

NOAA (n.d.). "*What is the Greenhouse Effect?*" Retrieved from https://www.climate.gov/news-features/understanding-climate/climate-change-atmospheric-carbon-dioxide

Nolt, J. (2011). How harmful are the average American's greenhouse gas emissions?. *Ethics, Policy and Environment*, *14*(1), 3-10.

Nord, L. O., & Bolland, O. (2020). *Carbon dioxide emission management in power generation*. John Wiley & Sons.

NRDC (October 7, 2018). *IPCC 1.5°C Report: A Call to Transform Our Energy System*. https://www.nrdc.org/bio/han-chen/ipcc-15degc-report-call-transform-our-energy-system

Ohlendorf, N., Jakob, M., Minx, J. C., Schröder, C., & Steckel, J. C. (2021). Distributional impacts of carbon pricing: A meta-analysis. *Environmental and Resource Economics*, *78*, 1-42.

Olabi, A. G., Obaideen, K., Elsaid, K., Wilberforce, T., Sayed, E. T., Maghrabie, H. M., & Abdelkareem, M. A. (2022). Assessment of the pre-combustion carbon capture contribution into sustainable development goals SDGs using novel indicators. *Renewable and Sustainable Energy Reviews*, *153*, 111710.

Osman, A. I., Hefny, M., Abdel Maksoud, M. I. A., Elgarahy, A. M., & Rooney, D. W. (2021). Recent advances in carbon capture storage and utilisation technologies: a review. *Environmental Chemistry Letters*, *19*(2), 797-849.

Ott, L., & Weber, S. (2018). *The impact of CO2 taxation on Swiss households' heating demand* (No. 18-09). IRENE Working Paper.

Partoon, B., & Javanmardi, J. (2013). Effect of mixed thermodynamic and kinetic hydrate promoters on methane hydrate phase boundary and formation kinetics. *Journal of Chemical & Engineering Data*, *58*(3), 501-509.

Partoon, B., Sabil, K. M., Lau, K. K., Nasrifar, K., & Shariff, A. M. (2019). Selective separation of methane from carbon dioxide through sII hydrates formation in a semibatch process. *Industrial & Engineering Chemistry Research*, *58*(36), 16834-16842.

Pendrill, F., Persson, U. M., Godar, J., Kastner, T., Moran, D., Schmidt, S., & Wood, R. (2019). Agricultural and forestry trade drives large share of tropical deforestation emissions. *Global environmental change*, *56*, 1-10.

Pierre-Louis, K. (2018). Greenhouse Gas Emissions Accelerate Like a 'Speeding Freight Train'in 2018. *The New York Times*, *5*.

Pigou, A. C. (1924). *The economics of welfare*. Macmillan.

Pires, J. C. M., Martins, F. G., Alvim-Ferraz, M. C. M., & Simões, M. (2011). Recent developments on carbon capture and storage: An overview. *Chemical engineering research and design*, *89*(9), 1446-1460.

Pizer, W. A., & Sexton, S. (2019). The distributional impacts of energy taxes. *Review of Environmental Economics and Policy*.

Pomerleau, K., & Asen, E. (2019). Carbon tax and revenue recycling: revenue, economic, and distributional implications. *Fiscal Fact*, *674*.

Poterba, J. M. (1991). Is the gasoline tax regressive? *Tax policy and the economy*, *5*, 145-164.

Pretis, F. (2022). Does a carbon tax reduce CO2 emissions? Evidence from British Columbia. *Environmental and Resource Economics*, *83*(1), 115-144.

Rafaty, R., Dolphin, G., & Pretis, F. (2020). Carbon pricing and the elasticity of CO2 emissions. INET *Working Paper No. 140*.

Raganati, F., Chirone, R., & Ammendola, P. (2020). CO2 capture by temperature swing adsorption: working capacity as affected by temperature and CO2 partial pressure. *Industrial & Engineering Chemistry Research*, *59*(8), 3593-3605.

Rausch, S., Metcalf, G. E., & Reilly, J. M. (2011). Distributional impacts of carbon pricing: A general equilibrium approach with micro-data for households. *Energy economics*, *33*, S20-S33.

Rehman, A. U., & Lal, B. (2022). Gas Hydrate-Based CO2 Capture: A Journey from Batch to Continuous. *Energies*, *15*(21), 8309.

Remuzgo, L., Trueba, C., & Sarabia, J. M. (2016). Evolution of the global inequality in greenhouse gases emissions using multidimensional generalized entropy measures. *Physica A: Statistical Mechanics and its Applications*, *444*, 146-157.

Rigby, M., Prinn, R. G., O'doherty, S., Miller, B. R., Ivy, D., Mühle, J., ... & Simmonds, P. G. (2014). Recent and future trends in synthetic greenhouse gas radiative forcing. *Geophysical Research Letters*, *41*(7), 2623-2630.

Rigby, M., Prinn, R. G., O'doherty, S., Miller, B. R., Ivy, D., Mühle, J., ... & Simmonds, P. G. (2014). Recent and future trends in synthetic greenhouse gas radiative forcing. *Geophysical Research Letters*, *41*(7), 2623-2630.

Rivers, N., & Schaufele, B. (2015). Salience of carbon taxes in the gasoline market. *Journal of Environmental Economics and management*, *74*, 23-36.

Rochelle, G. T., Wu, Y., Chen, E., Akinpelumi, K., Fischer, K. B., Gao, T., ... & Selinger, J. L. (2019). Pilot plant demonstration of piperazine with the advanced flash stripper. *International Journal of Greenhouse Gas Control*, *84*, 72-81.

Rodger, P. M. (1990). Stability of gas hydrates. *Journal of physical chemistry*, *94*(15), 6080-6089.

Ruddiman, W. F. (2017). *Plows, plagues, and petroleum: how humans took control of climate*. Princeton University Press.

Runst, P., & Thonipara, A. (2020). Dosis facit effectum why the size of the carbon tax matters: Evidence from the Swedish residential sector. *Energy Economics*, *91*, 104898.

Sabine, C. (2014). The IPCC fifth assessment report. *Carbon*, *5*(1), 17-25.

Sairinen, R. (2012). Regulatory reform and development of environmental taxation: The case of carbon taxation and ecological tax reform in Finland. In *Handbook of research on environmental taxation* (pp. 422-438). Edward Elgar Publishing.

Sanderson, B. M. (2011). A multimodel study of parametric uncertainty in predictions of climate response to rising greenhouse gas concentrations. *Journal of Climate*, *24*(5), 1362-1377.

Schulze, E. D., Luyssaert, S., Ciais, P., Freibauer, A., Janssens, I. A., Soussana, J. F., ... & CarboEurope Team. (2009). Importance of methane and nitrous oxide for Europe's

terrestrial greenhouse-gas balance. *Nature geoscience*, *2*(12), 842-850.

Sexton, A., Dombrowski, K., Nielsen, P., Rochelle, G., Fisher, K., Youngerman, J., ... & Davison, J. (2014). Evaluation of reclaimer sludge disposal from post-combustion CO2 capture. *Energy Procedia*, *63*, 926-939.

Shen, M., Tong, L., Yin, S., Liu, C., Wang, L., Feng, W., & Ding, Y. (2022). Cryogenic technology progress for CO2 capture under carbon neutrality goals: A review. *Separation and Purification Technology*, 121734.

Siegelman, R. L., Milner, P. J., Kim, E. J., Weston, S. C., & Long, J. R. (2019). Challenges and opportunities for adsorption-based CO 2 capture from natural gas combined cycle emissions. *Energy & environmental science*, *12*(7), 2161-2173.

Sifat, N. S., & Haseli, Y. (2019). A critical review of CO2 capture technologies and prospects for clean power generation. *Energies*, *12*(21), 4143.

Speck, S. (2017). Environmental tax reform and the potential implications of tax base erosions in the context of emission reduction targets and demographic change. *Economia Politica*, *34*(3), 407-423.

Spencer, D. F. (1999). *Integration of an advanced CO {sub 2} separation process with methods for disposing of CO {sub 2} in oceans and terrestrial deep aquifers*. ABB Corporate Research Ltd.: Baden-Daettwil, Switzerland, 1999.

Sterner, T. (2012). Distributional effects of taxing transport fuel. *Energy Policy*, *41*, 75-83.

Symons, E. J., Speck, S., & Proops, J. L. R. (2002). The distributional effects of carbon and energy taxes: the cases of France, Spain, Italy, Germany and UK. *European Environment*, *12*(4), 203-212.

Symons, E., Proops, J., & Gay, P. (1994). Carbon taxes, consumer demand and carbon dioxide emissions: a simulation analysis for the UK. *Fiscal Studies*, *15*(2), 19-43.

Theo, W. L., Lim, J. S., Hashim, H., Mustaffa, A. A., & Ho, W. S. (2016). Review of pre-combustion capture and ionic liquid in carbon capture and storage. *Applied energy*, *183*, 1633-1663.

Thisted, E. V., & Thisted, R. V. (2020). The diffusion of carbon taxes and emission trading schemes: The emerging norm of carbon pricing. *Environmental Politics*, *29*(5), 804-824.

Tiezzi, S. (2005). The welfare effects and the distributive impact of carbon taxation on Italian households. *Energy Policy*, *33*(12), 1597-1612.

Tsay, C., Pattison, R. C., Zhang, Y., Rochelle, G. T., & Baldea, M. (2019). Rate-based modeling and economic optimization of next-generation amine-based carbon capture plants. *Applied Energy*, *252*, 113379.

Tuckett, R. (2019). Greenhouse gases. In *Encyclopedia of Analytical Science* (pp. 362-372). Elsevier.

Vega, F., Cano, M., Camino, S., Fernández, L. M. G., Portillo, E., & Navarrete, B. (2018). Solvents for carbon dioxide capture. *Carbon dioxide chemistry, capture and oil recovery*, 142-163.

Vora, S., Brickett, L., Indrikanti, P., Munson, R., Murphy, J., Rife, T., ... & Zaremsky, C. (2013).

DOE/NETL advanced carbon dioxide capture R&D program: Technology update. *US Department of Energy/National Energy Technology Laboratory: Washington, DC, USA*.

Wang, Q., Hubacek, K., Feng, K., Wei, Y. M., & Liang, Q. M. (2016). Distributional effects of carbon taxation. *Applied energy*, *184*, 1123-1131.

Wang, Y., Zhao, L., Otto, A., Robinius, M., & Stolten, D. (2017). A review of post-combustion CO2 capture technologies from coal-fired power plants. *Energy Procedia*, *114*, 650-665.

Wang, Y., Zhao, L., Otto, A., Robinius, M., & Stolten, D. (2017). A review of post-combustion CO2 capture technologies from coal-fired power plants. *Energy Procedia*, *114*, 650-665.

Wendler, F. (2022). US Climate Politics Since the Paris Agreement. In *Framing Climate Change in the EU and US After the Paris Agreement* (pp. 119-185). Cham: Springer International Publishing.

Whitehead, D. (2011). Forests as carbon sinks—benefits and consequences. *Tree physiology*, *31*(9), 893-902.

Wier, M., Birr-Pedersen, K., Jacobsen, H. K., & Klok, J. (2005). Are CO2 taxes regressive? Evidence from the Danish experience. *Ecological economics*, *52*(2), 239-251.

Winkler, E. (July 27, 2017). How the climate crisis could become a food crisis overnight. *The Washington Post*. https://www.washingtonpost.com/news/wonk/wp/2017/07/27/how-the-climate-crisis-could-become-a-food-crisis-overnight/

Withana, S., Ten Brink, P., Kretschmer, B., Mazza, L., Hjerp, P., Sauter, R., ... & Illes, A. (2013). Evaluation of environmental tax reforms: international experiences, a report by the Institute for European Environmental Policy (IEEP) for the State Secretariat for Economic Affairs (SECO) and the Federal Finance Administration (FFA) of Switzerland. *Final Report. Brussels*, *73*.

Wolf, K. (2011). Developing a California Inventory for Industrial Applications of Perfluorocarbons, Sulfur Hexafluoride, Hydrofluorocarbons, Nitrogen Trifluoride, Hydrofluoroethers and Ozone Depleting Substances Agreement Number 07-313.

Woods Hole Oceanographic Institution. (2015). Introduction to ocean acidification. Accessed October 4, 2017.

World Bank (2022). *State and trends of carbon pricing 2021*. World Bank.

Yamazaki, A. (2017). Jobs and climate policy: Evidence from British Columbia's revenue-neutral carbon tax. *Journal of Environmental Economics and Management*, *83*, 197-216.

Yong, Z., Mata, V., & Rodrigues, A. E. (2002). Adsorption of carbon dioxide at high temperature—a review. *Separation and purification technology*, *26*(2-3), 195-205.

Zanco, S. E., Pérez-Calvo, J. F., Gasós, A., Cordiano, B., Becattini, V., & Mazzotti, M. (2021). Postcombustion CO2 capture: a comparative techno-economic assessment of three technologies using a solvent, an adsorbent, and a membrane. *ACS Engineering Au*, *1*(1), 50-72.

Zennaro, R., Tagliabue, M., & Bartholomew, C. H. (2000). Kinetics of Fischer–Tropsch synthesis on titania-supported cobalt. *Catalysis Today*, *58*(4), 309-319.

Zhao, B., Su, Y., Tao, W., Li, L., & Peng, Y. (2012). Post-combustion CO2 capture by aqueous

ammonia: A state-of-the-art review. *International Journal of Greenhouse Gas Control*, *9*, 355-371.

6.0 APPENDICES

Appendix 1: Global Carbon Taxes (2022)

Country Covered	Year of Implementation	GHG Emissions covered ($MtCO^2e$)	% Of Global GHG Emissions covered	% Of National GHG Emissions covered	Price ($\$/tCO^2E$)
Japan	2012	953	1.82	83.4	2.36
Singapore	2019	56	0.11	NA	3.69
Ukraine	2011	197	0.39	66.7	1.03
France	2014	158	0.31	38.8	49.29
UK	2013	97	0.19	29.6	23.65
Norway	1991	45	0.09	98.0	87.61/8.81
Finland	1990	27	0.05	76.0	85.10/58.58
Ireland	2010	27	0.05	53.8	45.31/37.02
Netherlands	2021	26	0.01	14.2	46.14
Sweden	1991	26	0.05	86.7	129.89
Portugal	2015	25	0.05	37.1	26.44
Denmark	1992	17	0.03	48.0	26.62/22.29
Poland	1990	16	0.03	4.1	0.08
Switzerland	2008	16	0.03	39.3	129.86
Slovenia	1996	11	0.02	62.4	19.12
Luxembourg	2021	7	0.01	65.5	43.35/27.63
Spain	2014	7	0.01	2.9	16.58
Iceland	2010	3	0.01	55.4	34.25/19.46

Source: Koppl & Schratzenstaller (2022); UNFCCC (2022).